Steel Cable Carriers.

Robust. Heat resistant. Long service life.

Energy needs **guidance.**

Pioneering innovation makes it possible.

KABELSCHLEPP invented the steel cable carriers more than 50 years ago.
A world market has developed for our idea –
and the inventor has become one of the companies which gives new impulses
to the market world wide by means of innovative solutions.

The original from the inventor – more than 50 years of experience

Our steel cable carriers are impressive due to functionality, long service life, fitting accuracy and variety. Benefit from our decades of experience and innovation strength. Our service includes all facets of constructive advice, technical design up to the delivery of complete solutions.

KABELSCHLEPP – global player from Germany

13 subsidiary companies, representations in 40 countries and an unchallenged position as one of the technology leaders make us successful globally. Our global sales network ensures not only fast delivery, but also that we are always close to you and always reachable.

■ KABELSCHLEPP steel cable carrier on a plano-milling machine, 1955

■ Steel cable carrier on a scissored coil lift

■ The group of companies' headquarters in Siegen. This is where worldwide experience and know-how come together.

Service that you can rely on

Our service team takes over the planning and execution of the assembly of cable carrier systems even with difficult assembly conditions.

- complete mounting with a guide channel
- uncoiling for long travel lengths
- assembly at significant heights (e. g. crane systems)

The specialists of our service center provide you with the support that you need. You will see: With KABELSCHLEPP, you make a decision in favour not only of a cable carrier, but of a totally harmonised system.

KABELSCHLEPP Service Center Hünsborn.

TOTALTRAX – everything from a single source

From our expertise in the area of cable carriers, you can also benefit in respect of other related things: Our LIFE-LINEs are highly flexible cables that satisfy particularly stringent quality requirements.

And our TOTALTRAX system goes one step further: We supply you with complete cable and hose carrier systems, including the chain, cables, plugs and connectors, all ready-to-install. The complete cable carrier system will be supplied to you "just-in-time" and ready to install.

Complete TOTALTRAX cable and hose carrier system with chain, cables, plugs and connectors, pre-mounted on a shipping crate.

KABELSCHLEPP

the power to innovate

Table of abbreviations on the back side, please open up.

Do stop by our page on the internet:

www.kabelschlepp.de

Cut down your construction times:

2D-/3D-CAD-data of our cable carrier systems.

Adapted to your requirements you can find our 2D-/3D-CAD-data in the component libraries of CADENAS and TRACEPARTS.

Further information can be found on page 53.

KABELSCHLEPP and EPLAN:

LIFE-LINE cable database for EPLAN.

Simplify your daily work with EPLAN.

- easy cable selection by construction
- automatic addition of core number, cross-section and core colour
- complete data for parts lists and other evaluations

Further information can be found on page 53.

General abbreviations

a_T = Distance from the inside edge of the end piece/ end divider to the centre of the first/last divider

a_x = Centre-to-centre spacing of dividers

B_{EF} = Width of the cable carrier including glide shoes

B_i = Cavity width inside the carrier cross-section

B_k = Width of cable carrier

B_{St} = Width of hole stays

B_A = Width of the support tray

B_{KA} = Width of the guide channel

b_1 = Clearance inside width of the support tray

c = Distance between the holes (for hole stays)

d = Cable or hose diameter

D = Hole diameter in hole stay

H = Connection mounting height

H_z = Installation height (required clear height)

h_A = Height of the support tray

h_G = Chain link height

h_i = Clearance height inside the carrier cross-section

h_{KA} = Height of the guide channel

h_1 = Outlet height of the upper trough in the guide channel

KR = Bending radius of the cable carrier

L_A = Length of the support tray

L_B = Length of the loop at the bend

L_f = Unsupported length

L_k = Length of the cable carrier (without connection)

L_{KA} = Length of the guide channel

L_S = Maximum length of the travel length

L_V = Longitudinal offsets between cable carrier fixed point and centre of the travel length

L_Z = Channel allowance dimension

l_1 = Connection dimensions

n_T = Number of dividers per cross-section

q_{EF} = Total weight of the carrier per metre
q_{EF} = Intrinsic carrier weight q_k + additional load q_z

q_k = Intrinsic carrier weight per metre

q_z = Additional load/m of cable carrier

RKR = Reverse bending radius

s = Sheet metal thickness

s_T = Divider thickness

s_{TA} = Divider thickness for mounting frame stay

t = Pitch

$Ü_B$ = Loop overhang (Depot)

X = Distance between the fixed points (in an opposing arrangement)

z = Pre-tension on the cable carrier

Contents

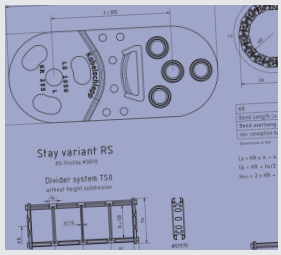

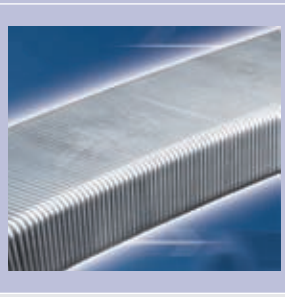

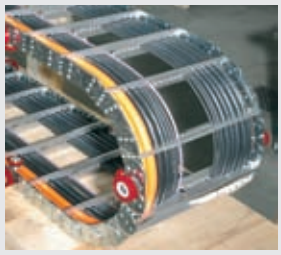

Copyright

Illustrations and text in this catalog are purely informative and, in part, only exemplary. They do not represent any quality guarantee and do not assure suitability for a particular application. This catalog is subject to technical and optical changes. Orders to be placed in the future are subject to the legally agreed quality of the relevant product, or otherwise the quality of each product as it was at the time of the signing of the contract.

All rights of this catalog are reserved, including text and illustrations, as well as brand names and corporate logos/trademarks used, in particular the rights of photocopying, distribution, translation or any other form of editing as well as the right of public reproduction.

No part of this catalog, including brand names and corporate logos/trademarks may be reproduced, processed, photocopied or distributed in any form or by any means, especially optical, photo-mechanical, paper-based or electronic, without prior written permission of KABELSCHLEPP GmbH.

Except hereof is the legally authorized use of photo-copying for merely private purposes (paragraph 53 German copyright law).

Our current terms and conditions of sales and delivery can be found at www.kabelschlepp.de

© 2008 · KABELSCHLEPP GmbH, D-57074 Siegen

Steel Cable Carriers/ Design guidelines

Information for the design of steel cable carriers

	page
Steel cable carriers	8
Guideline for fast product selection	14
Design guidelines	21
Laying guidelines for cables	46
Material properties	50

LS/LSX Series

Light, economically priced steel cable carriers

	page
Type LS/LSX 1050	57

S/SX Series

Extremely robust steel cable carriers

	page
Type S/SX 0650	73
Type S/SX 0950	85
Type S/SX 1250	97
Type S/SX 1800	115
Type S/SX 2500	125
Type S/SX 3200	131
Type S/SX 5000/6000/7000	137

CONDUFLEX / MOBIFLEX

Closed tubes

	page
CONDUFLEX	
Designer cable carrier	144
MOBIFLEX	
Tube	148

LIFE-LINE Safety Cables

Cables for cable carriers

TOTALTRAX

Complete Systems

	page
LIFE-LINE	
Safety Cables	152
TOTALTRAX	
Complete Systems	156

Accessories

The extensive range of accessories provides the appropriate solution for every application.

	page
Support trays/Guide channels	160
Support rollers	164
Steel band covers	166
Strain relief devices	167
Fax question form	174
Information request	175

Application examples

Steel cable carriers in use in various applications

	page
Application examples	177

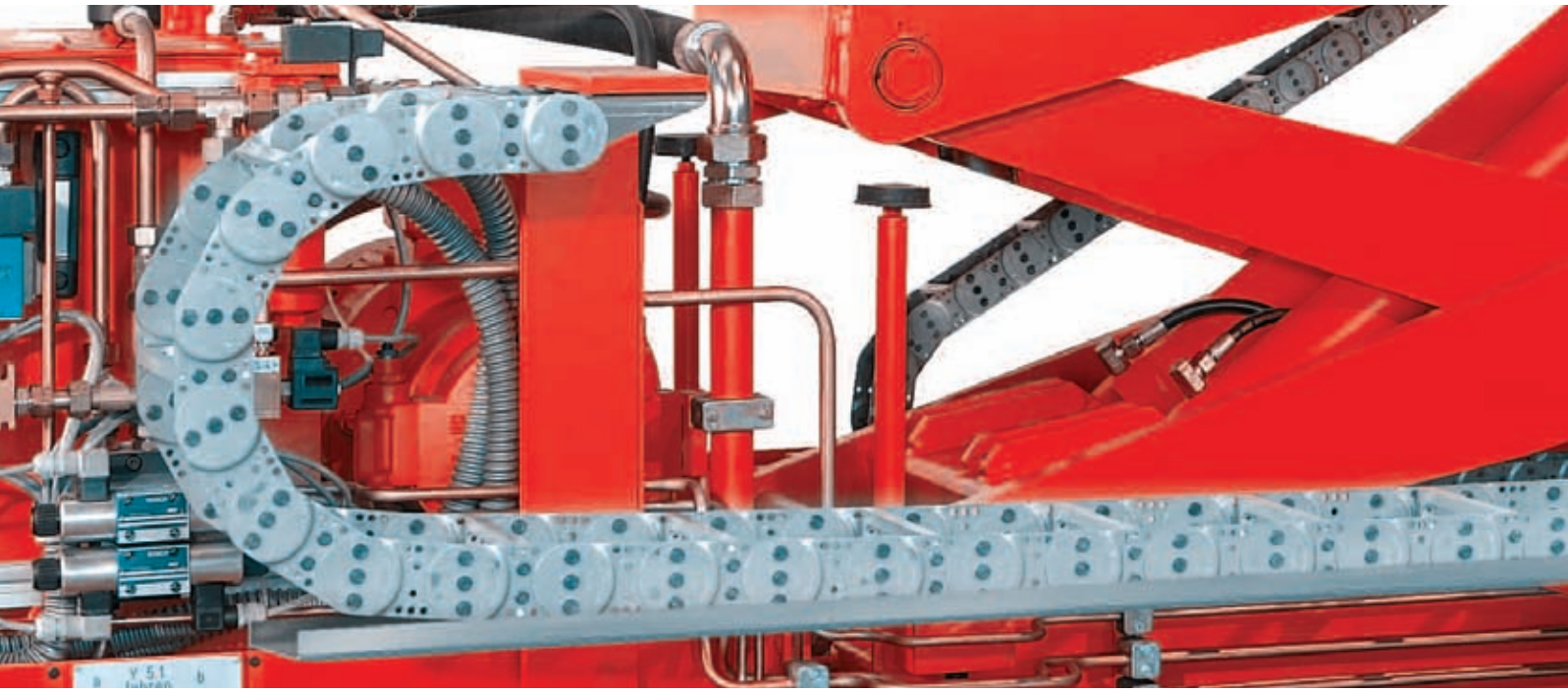

STEEL-LINE – Steel Cable Carriers.

Solutions for extreme applications.

Robust construction for strong mechanical loads

Due to their design and the use of high quality materials, our steel carriers can cope with the harshest loads.

Steel carriers also guarantee reliable operation in the case of serious contamination and external mechanical influences – expensive downtimes are avoided.

Examples of application areas:
steel works, foundries, drilling equipment, coal excavators, construction equipment, oil rigs, lifting vehicles, telescopic lifting equipment

High additional loads and large unsupported lengths

The high strength of the steel material makes possible significantly larger unsupported lengths for the same dimensions and additional loads than for plastic carriers.

Examples of application areas: plant construction, tool changers, telescopic lifting equipment

- **small dimensions**

  inner dimensions:
  31 x 65 mm

  system weight:
  up to 30 kg/m

  unsupported chain length:
  up to 3 m

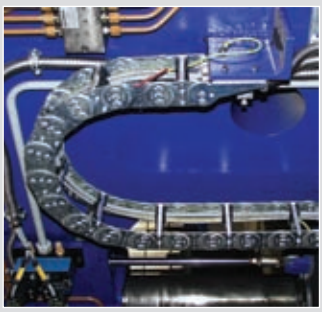

- **large dimensions**

  inner dimensions:
  370 x 1800 mm

  system weight:
  up to 600 kg/m

  unsupported chain length:
  more than 12 m

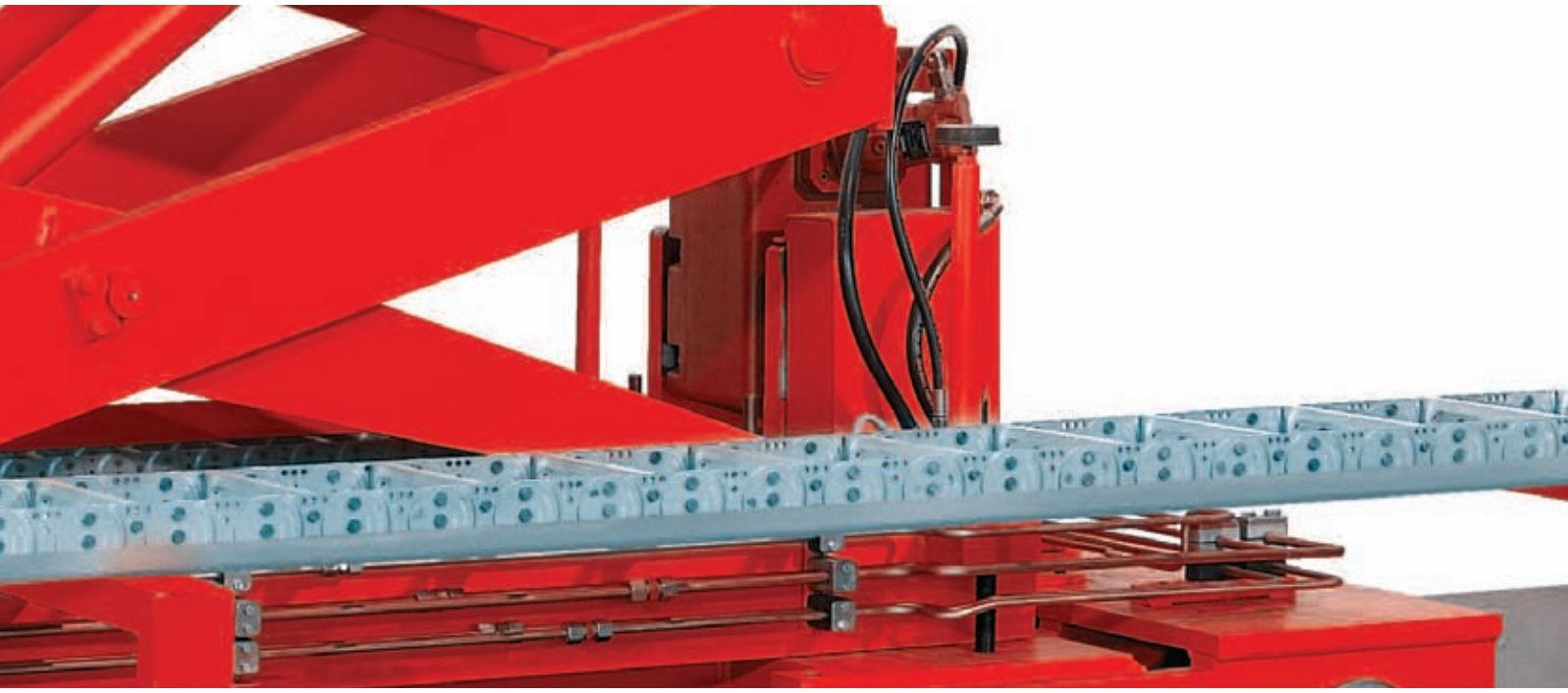

Heat resistance

- constant temperature loads up to 600 °C* (depending on stay and chain band design) are possible
- short-term up to 1000 °C* (SX version)
- hot chips, hot cast parts, forgings and molded parts
- high radiant heat

* maximum values, application dependent

Examples of application areas:
foundries, steel works, rolling mills, industrial furnaces

Extreme, particular environmental influences

- sea water resistant
- radiation resistant
- UV resistant
- chemical-resistant

Examples of application areas:
port facilities, offshore use, nuclear power stations, any outdoor use, waste disposal companies

LS/LSX Series.

Cost-effective steel chains with light design.

WIDTHSECTIONS 1 mm

STEEL SPECIAL COATED

STAINLESS STEEL RUST-FREE

LS/LSX series – light, economically priced steel chains.

The chains are very light and yet very stable due to the weight-optimized link plate design. The unsupported length for the LS series is significantly higher as compare with plastic chains of the same size.

- economically priced, light steel chains
- improved dynamic characteristic values due to weight-optimized design
- large unsupported lengths for small to medium additional loads
- available in 1 mm section width
- cover with steel band for protection of the cables available on request

LS/LSX steel chains can be found starting on page 54.

Design of steel cable carriers – page 22.

Light sidebands without additional bolts
Special coating or stainless steel

Optional: central bolt and locking ring
For applications involving large loads

Optional C-Rail for strain relief elements fixed in the connection

TIP: Design service

Our system consultants would be happy to carry out the design of your cable and hose carrier system for you – free of charge, competently and quickly. Please contact us.

S/SX Series.

Extremely robust steel chains in 9 different types.

S/SX series – extremely robust and stable steel chains for heavy mechanical loads and harsh environmental conditions.

Steel cable carriers proven over many years with extremely stable chain link plates and a link design with multiple stop system and special bolts. Large unsupported lengths and high additional loads are possible due to the extremely stable design.

- extremely robust, stable steel chains for heavy mechanical loads and harsh environmental conditions
- very large unsupported lengths also for large additional loads
- available in 1 mm section width
- different types with different dimensions are available
- covers with aluminium cover systems and steel band are possible for protecting the cables

S/SX steel chains can be found starting on page 70.

Design of steel cable carriers – page 22.

TIP: Design service

Our system consultants would be happy to carry out the design of your cable and hose carrier system for you – free of charge, competently and quickly. Please contact us.

Also available as covered variants with cover system or steel band covering.

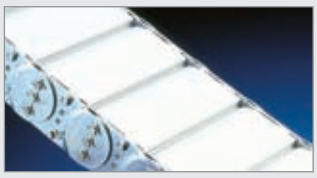

Cover systems – RMD stay variant.

Robust cover also for heavy mechanical loads.

See RMD stay variant within the types.

Steel band covers – economically priced, light cover variant for flying sparks and small chips.

See the Accessories chapter, page 159.

CONDUFLEX.

Closed designer cable carrier.

CONDUFLEX Designer TUBES

- Enclosed cable carriers in a sophisticated design
- Attractive appearance owing to high-grade steel brackets and fiberglass reinforced polyamide frame
- Optimized protection for cables and hoses

CONDUFLEX Designer TUBES can be found starting on page 143.

MOBIFLEX.

Flexible metal helical tube.

MOBIFLEX TUBES

- Enclosed cable carriers with flexible metal helical tubes
- Unsupported thanks to the inserted, pre-tensioned steel band. Ideal in case of hot metal chips.

MOBIFLEX TUBES can be found starting on page 148.

TIP: Design service

Our system consultants would be happy to carry out the design of your cable and hose carrier system for you – free of charge, competently and quickly. Please contact us.

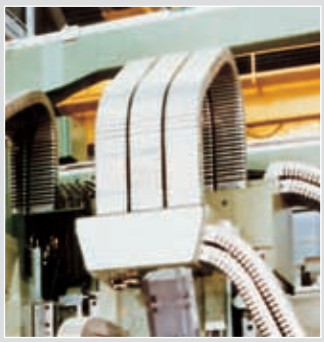

TOTALTRAX.

Complete systems.

LIFE-LINE.

Highly flexible electrical cables.

TOTALTRAX – completely pre-assembled cable carrier systems

One supplier and one contact person for the complete system. We take over the planning and project planning and the procurement of all components for your cable carrier system.

- Consulting
- Project planning
- Design
- Complete delivery
- Electrical cables
- Connectors
- Retaining plates
- Complete assembly of all components

TOTALTRAX Complete systems can be found starting on page 156.

LIFE-LINE Safety Cables – highly flexible electrical cables

The successful KABELSCHLEPP LIFE-LINE range is constantly expanded and optimized as an innovative standard range of modern cable carrier cables specially for use in cable carriers.

LIFE-LINE Safety Cables – an overview can be found starting on page 151.

Or simply request our catalogue "LIFE-LINE Safety Cables".

Guideline for fast product selection.

Product Symbol	Product		Type	Clearance height[A] h_i in mm	Carrier width[A] B_k in mm		Bend radii in mm	
					from	to	min.	max.
	Light cable carriers with chain bands made of steel[B]							
			LS/LSX 1050	58	100	600	105	430
	Cable carriers with chain bands made of steel[B]		**S/SX 0650**	31	70	500	75	400
			S/SX 0950	46	125	600	125	600
			S/SX 1250	72	130	800	145	1000
			S/SX 1800	108	180	1000	265	1405
			S/SX 2500	183	250	1200	365	1395
			S/SX 3200	220	250	1500	470	1785
			S/SX 5000	150	150	1000	500	1200
			S/SX 6000	240	200	1200	700	1500
			S/SX 7000	370	300	1500	1100	2400
	Flexible Energy Conduits made from steel or steel and plastic	**CONDUFLEX**	**CF 055**	25	–	45	65	150
			CF 060	40	–	36	–	100
			CF 085	38	–	73	100	250
			CF 115	52	–	102	140	300
			CF 120	70	–	100	155	200
			CF 175	72	–	162	185	350
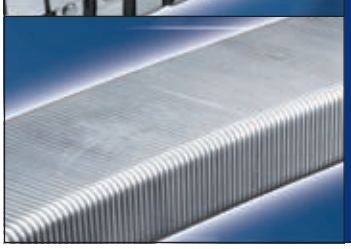		**MOBIFLEX**	**MF 030**	24	–	26	–	80
			MF 050	44	–	45	75	200
			MF 080	78	–	80	100	200
			MF 110	108	–	109	150	300
			MF 170	167	–	170	190	365

Reference:

- ■ Standard
- ▲ Customized standard products
- ● Special order as per customer specifications

Stay variants / stay designs:

(Detailed information starting on page 24)

RS – frame stay, narrow version
Variant RS 1 – with quick-release aluminium stays on the outside or inside
Variant RS 2 – with bolted aluminium stays

RV – frame stay, reinforced version
Aluminium stays on the inside and outside bolted to the chain bands – high stiffness

please open up

Travel length[D] L_S in m Unsupported arrangement	**Dynamics for unsupported arrangement** Travel speed[C] v_{max} in m/s	Travel acceleration a_{max} in m/s²	**Variants of carrier/hose cross-section** (Stay variants – see page 24) Closed frame	Frame stay **RS 2**	Frame stay **RS 1**	Frame stay **RV**	Frame stay **RM**
10.0	2.5	10.0		■		■	
6.0	2.5	5.0		■	■		
9.0	2.5	5.0		■	■		■
12.0	2.5	5.0		■	■	■	■
18.0	2.0	3.0					■
24.0	2.0	3.0					■
25.0	2.0	2.5					
12.0	2.0	3.0					
18.0	1.5	2.0					
25.0	1.0	1.0					
3.0	10.0	20.0	■				
3.5	10.0	20.0	■				
4.5	8.0	18.0	■				
5.0	8.0	16.0	■				
5.5	6.0	15.0	■				
6.0	6.0	12.0	■				
3.0	10.0	20.0	■				
3.0	10.0	20.0	■				
4.0	10.0	18.0	■				
4.0	6.0	15.0	■				
5.0	6.0	12.0	■				

RM – frame stay, solid version
Aluminium stays bolted on both sides – greatest stability, for maximum stay widths

RMR – roller stay system
Aluminium stays bolted on both sides – with plastic roller system

RMD – frame stay, cover system – covered cable carrier
Aluminium cover bolted on both the inside and outside to the chain bands

RMA – mounting frame stay
Stay variant for large cable diameter

Subject to change.

Frame stay **RMA**	Frame stay **RMR**	Tube stay **RR**	Hole stay **LG**	Frame stay **RMD**	Cover with spring steel strip possible	**Technical data** see page	**Type**
■		■	▲		on request	57	**LS/LSX 1050**
■		■	▲	■	■	73	**S/SX 0650**
	■	■	▲	■	■	85	**S/SX 0950**
■	■	■	▲	■	■	97	**S/SX 1250**
		■	▲	■	■	115	**S/SX 1800**
		●	▲		■	125	**S/SX 2500**
		●	▲			131	**S/SX 3200**
		●	●			137	**S/SX 5000**
		●	●			137	**S/SX 6000**
		●	●			137	**S/SX 7000**
					■E)	144	**CF 055**
						144	**CF 060**
					■E)	144	**CF 085**
					■E)	144	**CF 115**
						144	**CF 120**
					■E)	144	**CF 175**
						148	**MF 030**
						148	**MF 050**
						148	**MF 080**
						148	**MF 110**
						148	**MF 170**

RR – frame stay, tube version
Steel axles as connecting profiles
with rotating metal tubes

LG – hole stay – split design
Aluminium stays – order-specific production –
maximum degree of operating reliability

A) dependent on the stay variant
B) multi-band chains for larger widths possible
C) values for S and LS versions;
values for SX / LSX versions reduced by 0.5 m/s
D) values for S and LS versions;
See load diagram of the respective type for values for SX versions
E) cover with protective straps possible

Plastic cable carriers – the other cable carri

BASIC-LINE

BASIC-LINE Solid plastic cables carriers with fixed chain widths

- economically priced for standard applications
- many types available immediately ex-stock world wide

MONO Series

- single unit chain links with the option of either fixed or openable brackets
- simple and quick assembly
- end connector with integrated strain relief
- inside heights 10 – 42 mm
- inside widths 6 – 169 mm

UNIFLEX Series

- single unit chain links with the option of either fixed or openable brackets
- can be opened inwards or outwards according to preference
- robust, double stroke system for long unsupported length
- particularly high torsional rigidity
- open, half-covered and completely covered designs
- inside heights 17.5 – 44 mm
- inside widths 15 – 250 mm

BASIC-LINE*PLUS*

BASIC-LINE*PLUS* Solid plastic cables carriers with fixed chain widths

- fast laying by simply pressing in the cables
- no hinges, no hinge wear
- fixed widths / fixed chamber widths

PROTUM

- very long service life – no hinges and thus no hinge wear
- small, light cable carrier for unsupported applications
- very good ratio of useful space to outer dimensions
- low-vibration and quiet operation
- optimal for short travel lengths and high travel speeds
- inside heights 15 – 25 mm
- inside widths 15 – 45 mm

Protum Office: Flexible cable carrier for office and workshop furniture

PRO*file*®

- optimal for short travel lengths and high travel speeds
- low-vibration and quiet operation
- very long service life
- tested over several million movement cycles
- clean-room compatibility due to low-wear design and the associated minimal particle emission

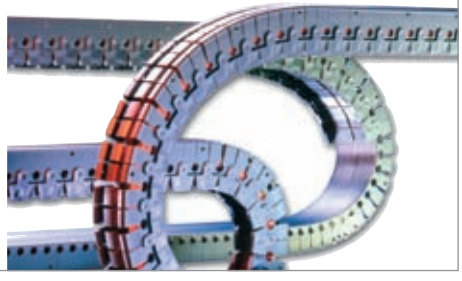

VARIO-LINE

VARIO-LINE Solid plastic cables carriers with variable chain widths

- can be opened on both sides
- available in variable widths
- aluminium or plastic stays
- light, solid or link-free sidebands depending on the application

K Series

- robust, simple design, even for large additional loads
- solid plastic or in combination with aluminium stays
- enclosed stop system not sensitive to dirt / contamination
- available for aluminium stays in 1 mm section widths
- glide discs for applications where the carrier is installed on its side
- inside heights 38 – 58 mm
- inside widths 68 – 561 mm

MASTER Series

- light-weight, low-noise cable carriers
- customized bend radii are available
- standard widths available ex-stock; individual widths in 1 mm sections on request
- low intrinsic weight
- aluminium stays
- inside heights 33 – 80 mm
- inside widths 50 – 800 mm

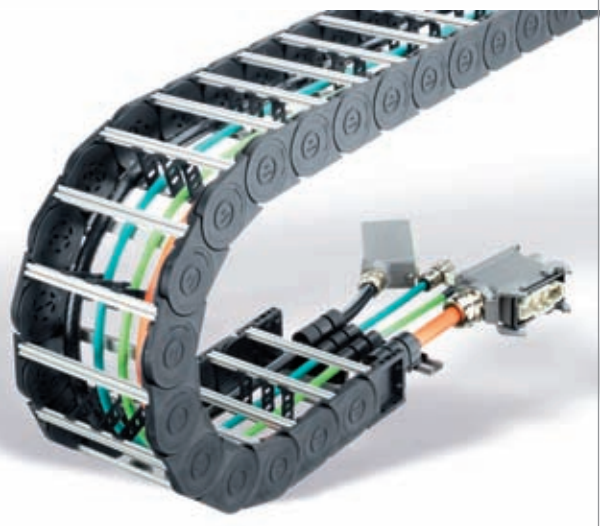

M Series

- the robust all-rounder, various separation options, large selection of stay systems
- ideal for fast, gliding applications
- highly wear-resistant, replaceable glide shoes available – resulting in minimal wear at high speeds and multiple shift operation, sliding in the guide channel
- inside heights 19 – 87 mm
- inside widths 24 – 800 mm

Subject to change.

VARIO-LINE

XL Series

- large dimensions for cables with large cable diameter
- for unsupported and gliding applications
- highly wear-resistant, replaceable glide shoes available – resulting in minimal wear at high speeds, sliding in the guide channel
- available in 1 mm width sections
- aluminium stays
- inside height 108 mm
- inside widths 200 – 1000 mm

TKR 0200

- extremely low-noise and low-vibration cable carrier
- long service life
- ideal for highly dynamic applications
- high side stability
- suitable for clean rooms
- can be quickly and easily opened on the inside and outside
- the modular design makes it easy to shorten and lengthen
- inside height 28 mm
- inside widths 40 – 100 mm

QUANTUM

- for extremely high accelerations (bis 300 m/s²) and operational speeds up to 40 m/s
- for additional 3D-movements at the driver connection
- modular construction with extruded sidebands made of plastic, with stays made of aluminium or plastic
- many separation options for the cables
- available in 1 mm section widths (for aluminium stays)
- can be opened quickly on both sides
- inside heights 28 – 72 mm
- inside widths 28 – 600 mm

3D-LINE

3D-LINE Cable carrier for 3D movements

ROBOTRAX

- for three-dimensional movements
- open design
  - – fast cable laying by simple pressing in of the cables – no threading through is necessary
  - – simple check of all cables
- can be deployed on robots for swiveling and rotational movements: the same system for robot feet and arms
- optimal for the long service life of the cables:
  - – the minimum bend radius can be maintained
  - – the cables are separated cleanly in three chambers
- special plastic for long service life
- 5 installation sizes with external diameters of 40 – 100 mm

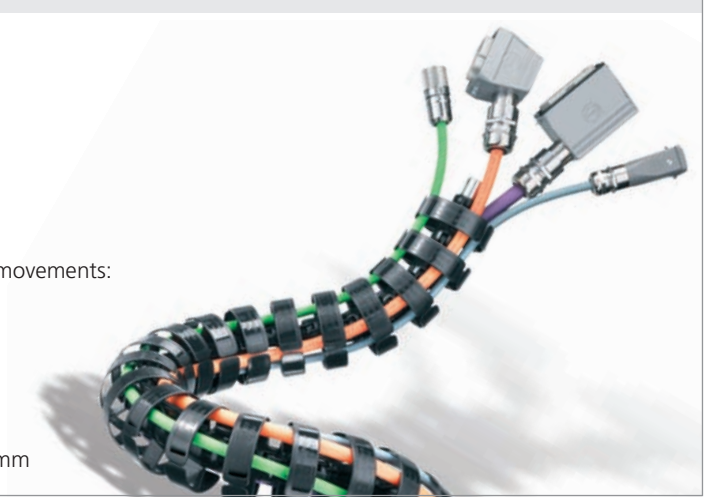

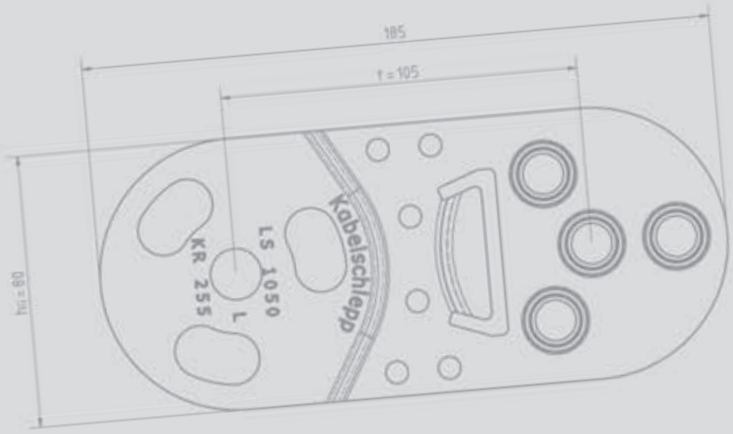

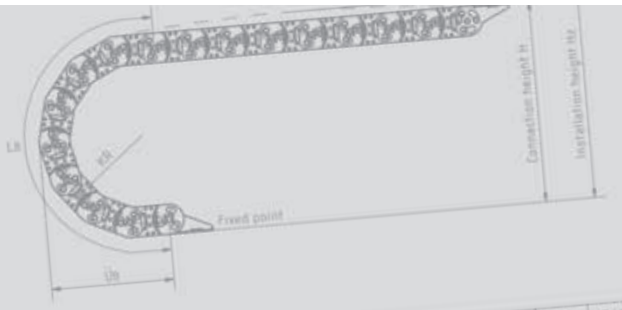

KR	105	125	155	190	255	290	325	360	425
Bend Length Ls	750	813	907	1017	1220	1330	1440	1550	1755
Bend overhang Us	355	375	405	440	505	540	575	610	675
min. connection height H_{min}	330	370	430	500	630	700	770	840	970

(Dimensions in mm)

$L_s = KR \times \pi + 4 \times t$

$U_s = KR + h_s/2 + 2 \times t$

$H_{min} = 2 \times KR + 1.5 \times h_s$

Stay variant RS

RS-Profile #5818

Divider system TS0

without height subdivision

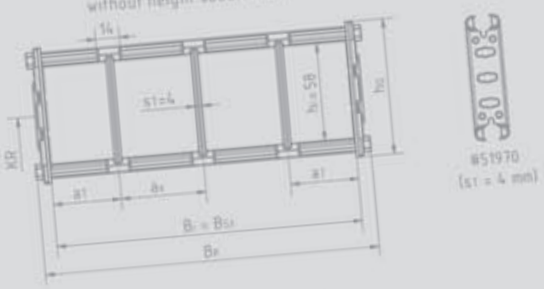

Divider system TS1

with continuous hight division
Aluminium-Profile 11x4 #5803

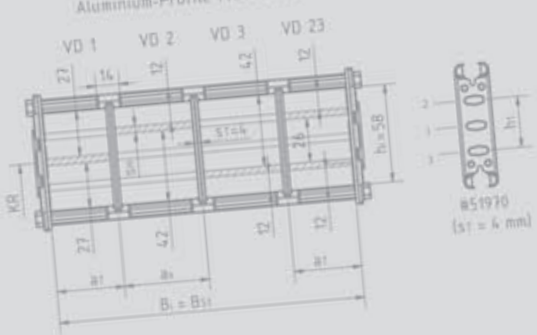

Stay variant RV

Frame stay-profile #5818

Divider system TS0

without height subdivision

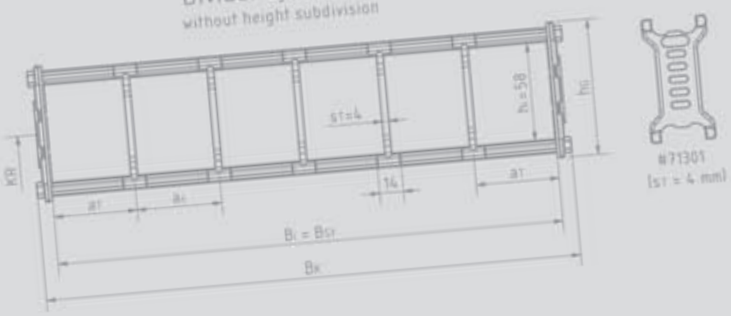

Divider system TS1

with continuous hight division
Aluminium-Profile 11x4 #5803

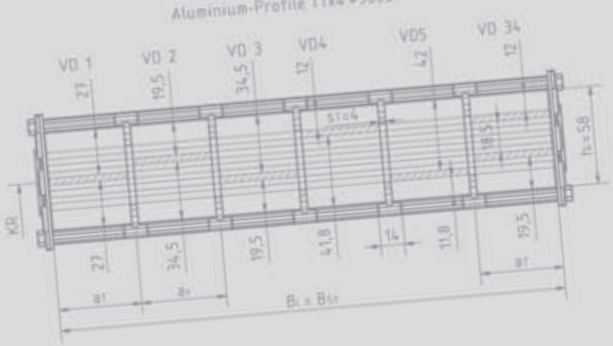

Divider system TS2

with hight division
Aluminium-Profile 11x4 #5803

Divider system TS2

with hight division
Aluminium-Profile 11x4 #5803

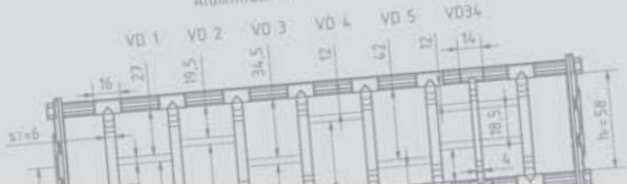

More information: **www.kabelschlepp.de**

Subject to change.

Steel Cable Carriers

Design Guidelines

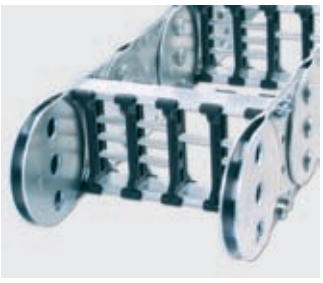

	page
Carrier construction	
– Design of steel cable carriers	22
– Internal subdivision of the carrier cross section, cable guidance/divider systems	23
Stay variants	24
Design of the cable carrier	
– Inner dimensions, bend radius	26
– Chain length, support	27
– Chain cover, connection mounting height, pre-tension	28
– Connection variants	29
Overview of installation variants	30
Laying guidelines for cables and hoses	45
Strain relief of cables and hoses	48
Long service life of the cables	49
Material specifications of cable carriers	50
Environmental conditions	52

Carrier construction.

Design of steel cable carriers.

KABELSCHLEPP cable carriers made of steel consist of two or more parallel running chain bands made of high quality, specially coated, galvanized or rust and acid resistant steel.
The chain bands are connected using variable width stays and this forms the cable space.

Carrier construction LS/LSX Series

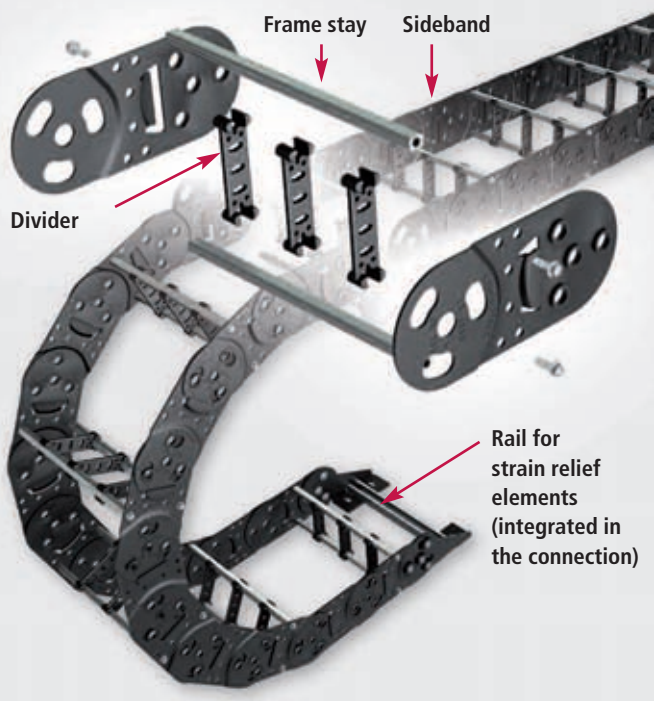

1-plate design:
Weight-optimized link plates only consist of one plate. The stroke system is integrated.

Optional central bolts
for applications with high loads.

Shortening and extending the cable carrier
by connecting the chain plates.

Carrier construction S/SX Series

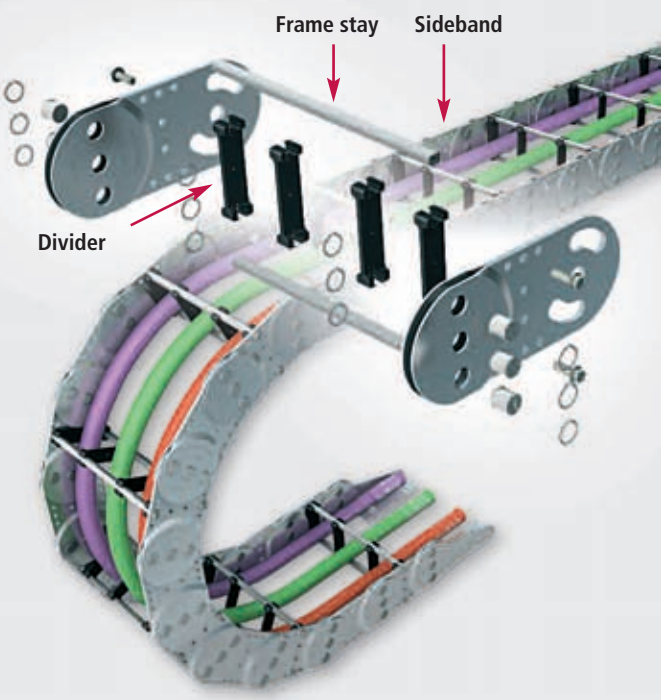

Sandwich design:
The chain link plates consist of two plates welded together.

Stroke system
with special bolts and locking rings (standard version)

Glide shoes for gliding applications.

LS/LSX steel chains can be found starting on page 54.

S/SX steel chains can be found starting on page 70.

Internal subdivision of the carrier cross section.

Dividers made of plastic or steel and different height subdivisions make subdivision of the carrier cross section possible. In this way, the laid cables are separated and twisting the cables with each other is prevented. See also page 45.

Cable routing for hole stays

Stay variant LG

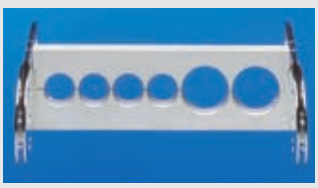

With hole stays, the number and position of the cables in the cross section are taken into account exactly as regards the shape. These can be routed in the neutral bending zone.

Benefits:

- stable construction
- longer service life of the cables due to low relative movement of the cables for the stay

Divider systems for frame stays

Divider system TS 0

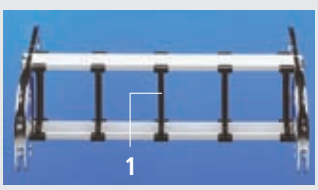

Vertical separations with dividers (1)

Divider system TS 1

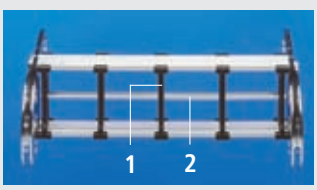

Vertical separations with dividers (1)
Partial horizontal height subdivisions across the **entire inside width** (2)

Divider system TS 2

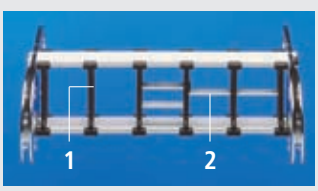

Vertical separations with dividers (1)
Horizontal height separators made of aluminium. **Available in 1 mm width sections (2)**

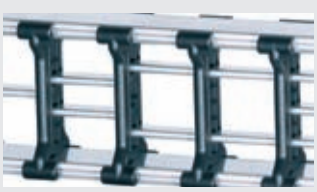

Divider system TS 3

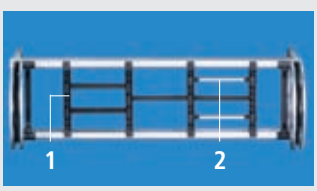

Vertical separations with dividers (1)
Horizontal height separations with partitions made of plastic or aluminium (2). These can also be **installed at a later date** or **modified by changing the partitions**.

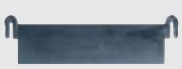

Partition made of plastic

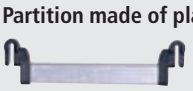

Partition made of aluminium with plastic adapters. Available in 1 mm width sections.

Divider systems TS 4 and TS 5 (not illustrated)

Divider system TS 4:
Half-dividers and continuous height subdivision
Divider system TS 5:
Hole stay inserts made of plastic – split design

Stay variants.

The appropriate solution for every application.

Stay variant RS 2 – with bolted stays

- frame stay RS made of aluminium – standard design
- for lightweight to medium loads
- available for the types: LS/LSX 1050, S/SX 0650, 0950 and 1250
- **Standard stay arrangement:** on every 2nd chain link. Stays can be fitted on every chain link, please specify when placing your order.
- bolted stays for maximum stability

Stay variant RS 1 – with a detachable stay

- frame stay RS made of aluminium – standard design
- for lightweight to medium loads
- available for the types: S/SX 0650, 0950 and 1250
- **Standard opening options:** **Outside:** The cable carrier can be opened quickly and easily simply by rotating the stays through 90°. **Inside:** Screwed stays

  Also optionally available with stays bolted on the inside and outside which can be opened by turning. Please state when ordering.
- **Standard stay arrangement:** on every 2nd chain link. Stays can be fitted on every chain link, please specify when placing your order.

Stay variant RV – frame stay, reinforced design

- frame stay RV made of aluminium – reinforced design
- for medium to heavy loads and for large chain width
- available for the types: LS/LSX 1050 and S/SX 1250
- **Standard stay arrangement:** on every 2nd chain link. Stays can be fitted on every chain link, please specify when placing your order.
- bolted stays for maximum stability

Stay variant RM – frame stay, solid design

- frame stay RM made of aluminium – solid design
- for heavy loads – maximum chain widths possible
- available for the types: S/SX 0950, 1250, 1800 and 2500
- **Standard stay arrangement:** on every 2nd chain link. Stays can be fitted on every chain link, please specify when placing your order.
- bolted stays for maximum stability

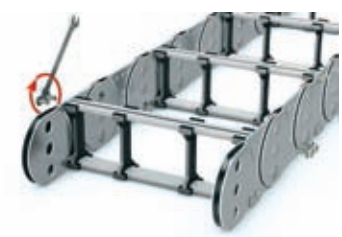

Stay variant RMA – mounting frame stay

- for very large cable diameters such as with air hoses
- cables with diameters greater than the clearance height of the chain links can be routed
- installed on the inside or outside in the bend radius according to preference
- available for the types: LS/LSX 1050, S/SX 0650 and 1250
- **Standard stay arrangement:** on every 2nd chain link. Stays can be fitted on every chain link, please specify when placing your order.
- bolted stays for maximum stability

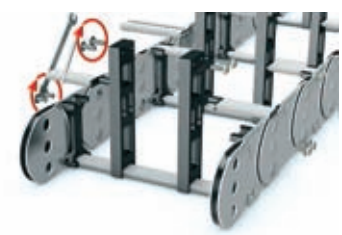

Stay variant RMR – frame stay with plastic roller system

- gentle cable support due to rotating plastic tubes
- ideal when using media hoses with "soft" sheaths
- available for the types: S/SX 0950 and 1250
- stay profile made of aluminium – rollers made of plastic
- dividers in roller version
- **Standard stay arrangement:** on every 2nd chain link. Stays can be fitted on every chain link, please specify when placing your order.
- bolted stays for maximum stability

Stay variant RR – frame stay, tube design

- ideal when using media hoses with "soft" sheaths
- gentle cable support due to rotating metal tubes
- available for the types:
  LS/LSX 1050, S/SX 0650, 0950, 1250 and 1800
- possible materials of the axles, tubes and dividers:
  – axles, galvanized steel with plastic dividers
  – axles and dividers made of galvanized steel
  – axles and dividers made of stainless steel ER 1, ER 1S
- **Standard stay arrangement:**
  on every 2nd chain link.
  Stays can be fitted on every chain link, please specify when placing your order.
- bolted stays for maximum stability

Stay variant LG – hole stay made of aluminium, split design

- optimum cable guidance in the neutral bending line is possible
- drilling pattern individually adapted to the application
- available for the types:
  LS/LSX 1050, S/SX 0650, 0950, 1250, 1800, 2500, 3200, 5000, 6000 and 7000
- high stability due to solid construction
- split design as standard for easy laying of the cables
- **Standard stay arrangement:**
  on every 2nd chain link.
  Stays can be fitted on every chain link, please specify when placing your order.
- bolted stays for maximum stability
  – also available not split

Examples of some hole patterns:

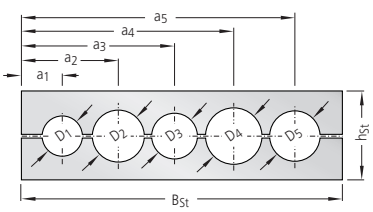

Split hole stay with individual holes

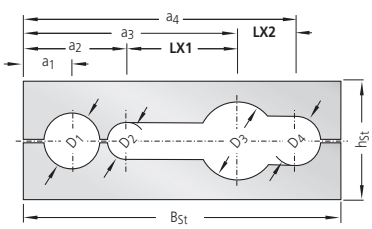

Split hole stay with offset elongated hole

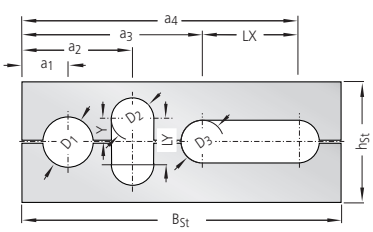

Split hole stay with horizontal and vertical elongated holes[1)]

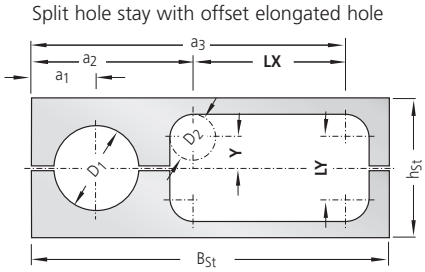

Split hole stay with rectangular elongated hole[1)]

[1)] with an off-center arrangement of the holes, the cables are subject to a relative movement when the carrier is in motion.

Stay variant RMD – covered cable carrier, STEEL-TUBE

- aluminium cover system for protecting the cables and hoses
- for applications where chips or severe contamination occur
- available for the types:
  S/SX 0650, 0950, 1250 and 1800
- bolted aluminium cover for maximum stability

Steel band covers are also available as light-weight, economically priced alternatives to covering with the aluminium cover system[2)]

[2)] LS/LSX 1050 on request.

Special stays

Customized special stays are possible on request. Please contact us.

Design of the cable carrier.

Determining the inner dimensions

The number, type and diameter of the cables to be laid determine the inner dimensions and the inner subdivision of the cable carrier.

The space required by the cables and hoses can be calculated taking into consideration the design instructions on page 28. The installation conditions give the required clearance height and the inside width of the cable carrier.

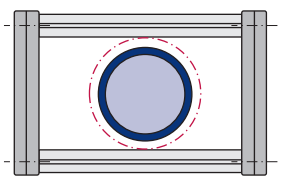

The following are guide values for the dimensions of the required free space:

- **for round cables:**
  10 % of the cable diameter
- **for flat cables:**
  10 % each of the cable width/ cable thickness
- **for hoses:**
  20 % of the hose diameter

Basically, only cables which are suitable for use in cable carriers, such as e.g. KABELSCHLEPP LIFE-LINE cables, should be used.

Determining the bend radius

The bend radius is determined by two factors:

1. The smallest permissible bend radius of the cables gives the smallest permissible bend radius of the cable carrier (in case of a smaller bend radius, the cables would be bent to an impermissible extent). Generally, the thickest or the stiffest cable to be carried determines the largest permissible minimum bend radius.
2. The available installation space determines the possible bend radius of the cable carrier. This must be checked with the specifications of the cables.

The following is a guide for selection of the minimum bend radius:

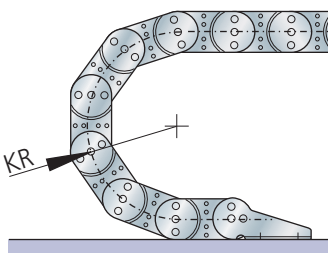

Minimum bend radius = 5...12 cable Ø d
Bend radius fabrication tolerance: 0 – 5 %

If you have any questions, we are happy to advise you.

TIP: Cable service life

A greater bend radius of the cable carrier and thus greater bend radius (than the permissible minimum bend radius) usually increases the service life of the cables. Thus, if it is possible, preferably select a somewhat larger bend radius. When using our LIFE-LINE cables, a smaller bend radius can be selected in many cases.

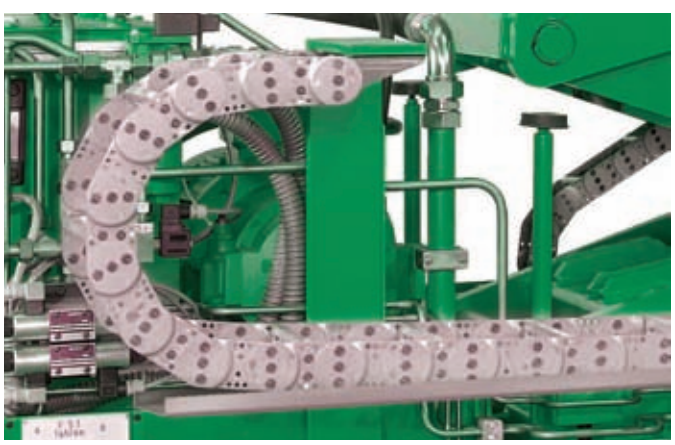

Calculation of the chain length

Fixed point arrangement in the middle of the travel length:

Unsupported length L_f

$$L_f = \frac{L_S}{2} + t$$

See technical data of the types for L_f approval.

Chain length L_k

$$L_k = \frac{L_S}{2} + L_B$$

Chain length L_k rounded off to pitch t

Bend length $L_B = KR \cdot \pi + \text{Reserve}$

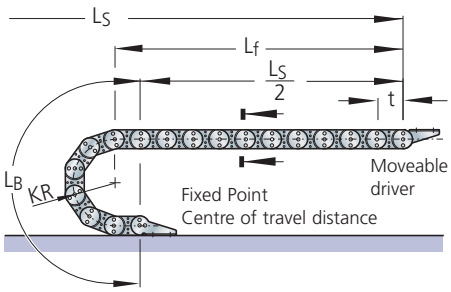

We recommend placing the fixed-point connection in the middle of the travel length. This gives the shortest connection between the fixed and movable driver point and thus the most economical chain length and cable length.

Fixed point outside the middle of the travel path:

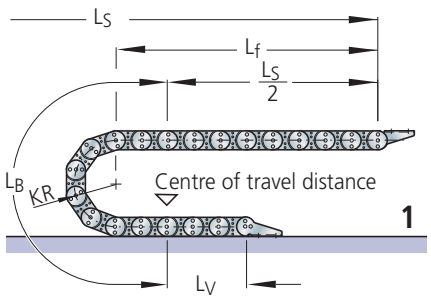

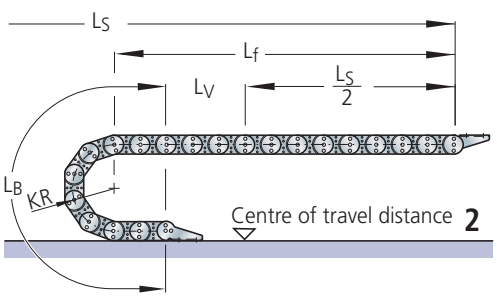

Variant **2**: please observe greater unsupported length L_f.

L_V = Length between connection point and middle of the travel length
L_S = Maximum travel length of the consumer

Chain length L_k

$$L_k = \frac{L_S}{2} + L_B + L_V$$

Chain length L_k rounded off to pitch t

Support

The support surface must be even and the support area must be free of obstacles. If a faultless support is not available on-site, you must use a support tray.

Detailed explanations can be found starting on page 163.

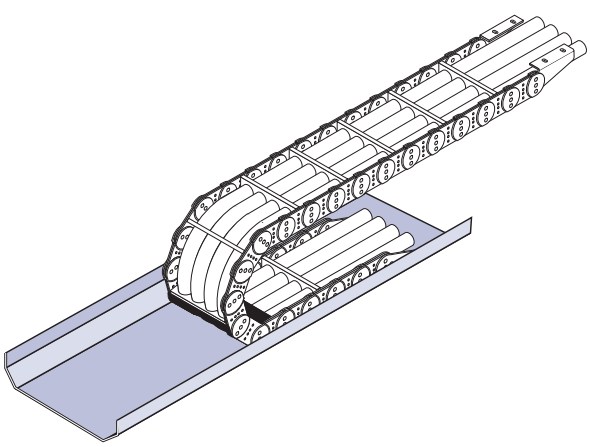

Design of the cable carrier.

Chain cover

Covered or closed cable carriers should be used for applications where chips or severe contamination occur.

Two different cover variants are available for steel cable carriers:

- Steel band covers
- Aluminium cover system (RMD stay variant)

Alternatively, our TUBE SERIES CONDUFLEX / MOBIFLEX can also be used.

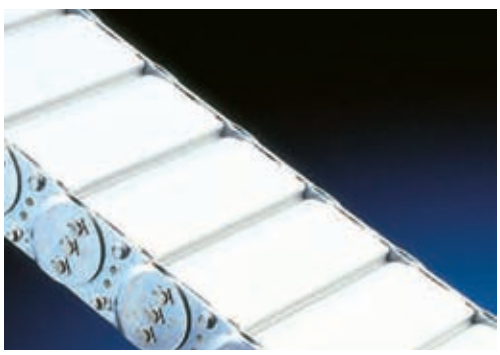

- Detailed information about aluminium cover systems can be found with the respective types.

- Detailed information about steel band covers can be found on page 166.

Calculation of the connection height for steel cable carriers

Connection height H
$H = 2\ KR + 1.5\ h_G$

Schematic illustration of unsupported arrangement

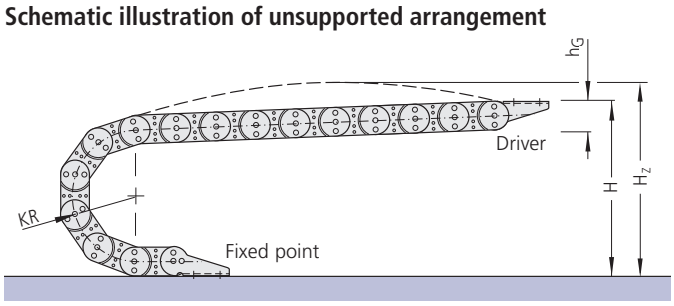

Pretension and required installation height Hz

In order to achieve as large as possible unsupported length, KABELSCHLEPP cable carriers are made with pre-tensioning in the standard version. The pre-tensioning effects an elevation of the upper trough in the zone of the unsupported length. Please take account of the pre-tension when determining the required passage height H_Z.

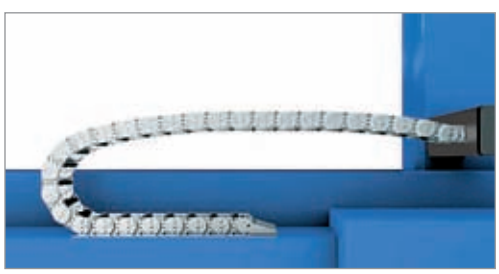

- Cable carrier without additional load

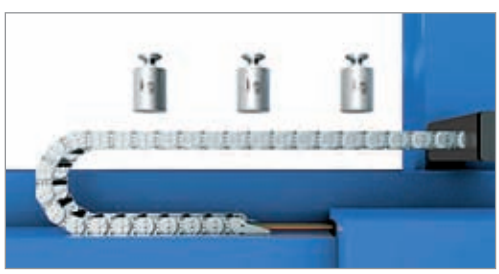

- Cable carrier with additional load (cables and hoses)

Chain connection – connection variants

There are no particular design requirements for connecting the cable carrier to the parts of your system. Various connection variants are possible.

- **Driver connection:**
  Attachment to moving machine or system part.
- **Fixed point connection:**
  Attachment to static machine, floor and system part.

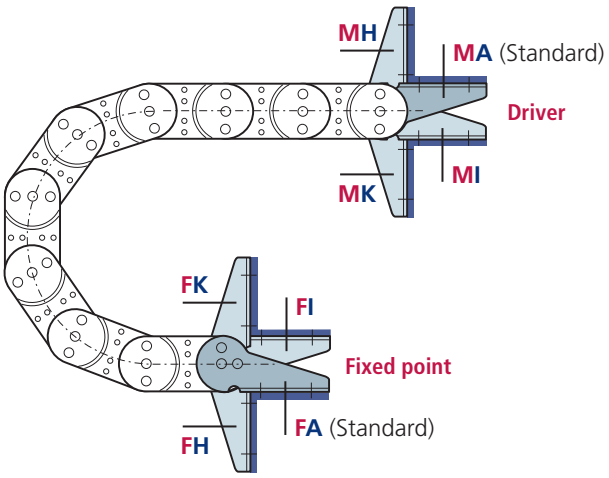

Point of connection

M – Driver

F – Fixed point

Connection type

A – Bolts facing outward (standard)

I – Bolts facing inward

H – Threaded joint, rotated by 90° to the outside

K – Threaded joint, rotated by 90° to the inside

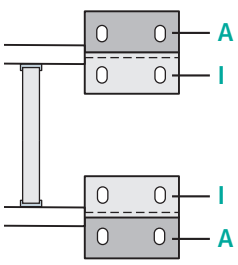

Connection surface

The connecting surfaces on the driver and fixed point can be mounted on the outside or inside according to preference.

I – connector surface inside (< B_k)

A – connector surface outside (> B_k)

In the standard version, the connectors are mounted with the bolting to the outside and the connecting surface to the inside (FAI/MAI).

Overview of installation variants.

Code	Symbol	Description	Page	Cable carrier design LS/LSX	Cable carrier design S/SX	Enclosed cable carriers CONDUFLEX and MOBIFLEX
EBV 01	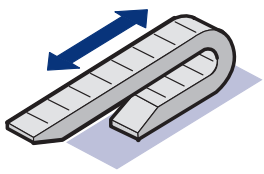	horizontal arrangement "unsupported"	**32**	■	■	■
EBV 02	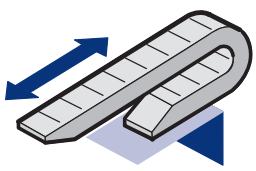	horizontal arrangement "unsupported – overhanging"	**32**	■	■	■
EBV 04	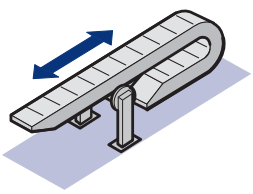	horizontal arrangement "with support"	**33**	▲	▲	●
EBV 05	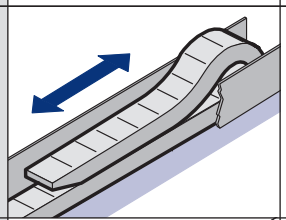	horizontal arrangement "gliding in a guide channel"	**34**	–	▲	–
EBV 06	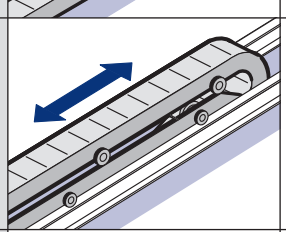	horizontal arrangement "with continuous support structure"	**35**	▲	▲	–
EBV 07	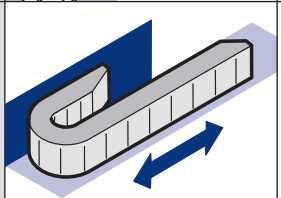	horizontal arrangement "rotated 90° – straight"	**38**	●	▲	●
EBV 08	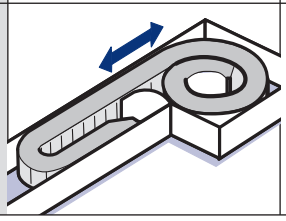	horizontal arrangement "rotated 90° – looped"		●	▲	●

Reference: ■ Standard ▲ Customized standard product ● Special order

Subject to change.

Code	Symbol	Description	Page	Cable carrier design LS/LSX	Cable carrier design S/SX	Enclosed cable carriers CONDUFLEX and MOBIFLEX
EBV 09	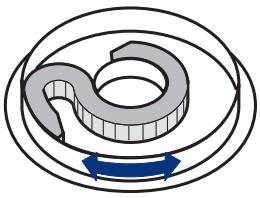	horizontal arrangement "rotated 90° – circular"	**39**	–	■	–
EBV 10	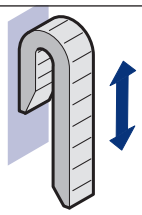	vertical arrangement "standing"	**41**	■	■	■
EBV 11	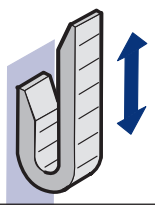	vertical arrangement "hanging"	**42**	■	■	■
EBV 12	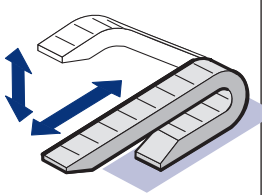	horizontal/ vertical arrangement "combined"	**43**	■	■	■
EBV 13	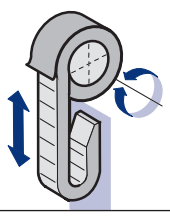	vertical arrangement "looped"	**43**	■	■	■
EBV 14	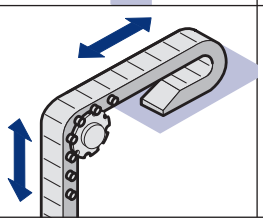	vertical arrangement "hanging with bearing bolts"	**43**	●	▲	–

Reference: ■ Standard ▲ Customized standard product ● Special order

The installation variants shown demonstrate the many movement processes which can be triggered with a single cable carrier.

EBV 01

Horizontal arrangement unsupported

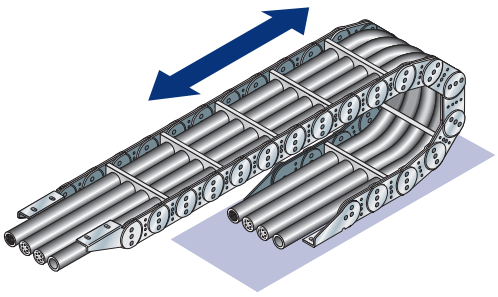

Note:

If you cannot find any suitable cable carrier in the unsupported range for your application, we recommend carrying out the following check:

1. Provide support for the cable carrier in the unsupported area (see installation variant EBV 04).
2. Select the "gliding in a guide channel" cable carrier system (see installation variant EBV 05).
3. Use the cable carrier system "with continuous support structure" (see installation variant EBV 06).

Definition:

In the case of unsupported arrangements, the driver connection of the cable carrier is fastened to the movable part of the system and moves with it in the horizontal direction.

The upper run of the cable carrier stands free, i.e. unsupported and without sag, parallel over the entire supported lower run.

EBV 02

Horizontal arrangement unsupported – overhanging

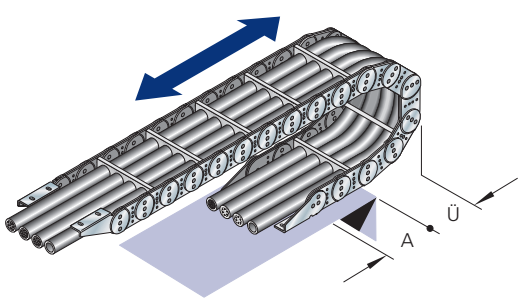

$$Ü_{max} \leq \frac{L_f}{4}$$

Definition:

The lower run of the cable carrier is not supported over its total travel length. We will be happy to calculate the required measurements A + Ü for your individual application.

Allow us to plan your application for you.

EBV 04

Horizontal arrangement with support using support roller(s)

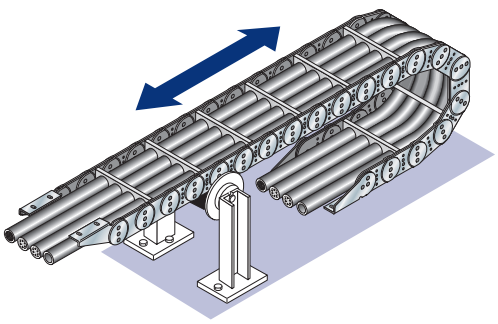

Definition:

If the unsupported length of the cable carrier is exceeded, the upper run can be supported.

Instead of using a KABELSCHLEPP cable carrier with supports, we recommend that you use the next size up, provided that the installation conditions allow this.

Support rollers – see also Accessories chapter, page 164.

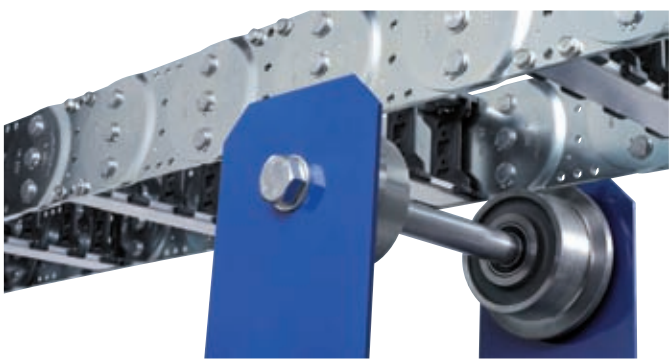

Arrangement of support

Arrangement using one support roller:

when $L_S < 3\ L_f$ $\qquad a_R = \frac{L_S}{6}$

The distance of the support to the fixed point in this arrangement is approx. 1/6 of the total travel length.

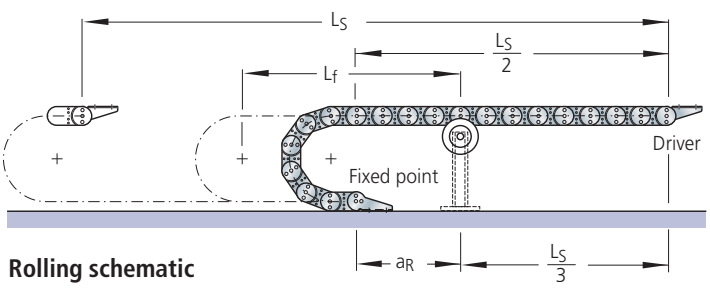

Rolling schematic

Special design with lateral rollers:

when $L_S < 4\ L_f$

For using the maximum possible travel length in the unsupported arrangement without travelling support construction.

Lateral rollers are mounted onto the chain links.

This kind of installation needs a flat surface, in certain cases a support tray may need to be installed.

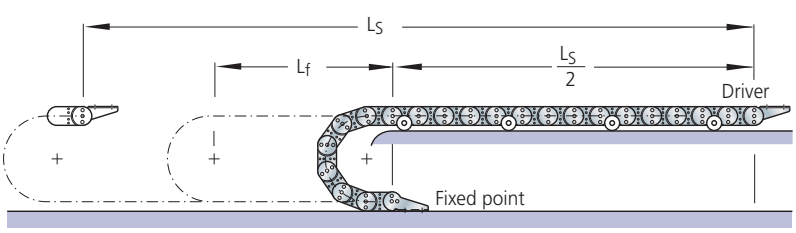

Rolling schematic

EBV 05

Horizontal arrangement gliding in guide channel

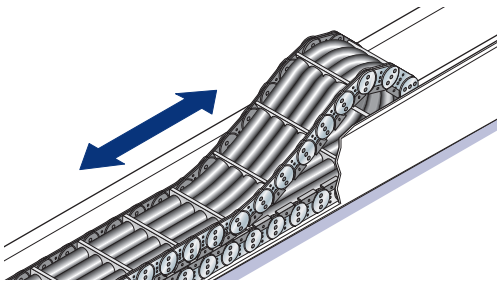

Definition:

The upper run of the cable carrier **glides** on the lower run or on a sliding surface of the relevant guide channel.

Application:
For long travel lengths, which can no longer be realised in an unsupported design.

Condition:
The cable carriers **must** be placed in a channel.

See page 160 for channel systems.

Glide elements:

Glide shoes are bolted to the side plates of the cable carrier. KABELSCHLEPP provides screw-on glide shoes made of abrasion-resistant, gliding plastics. The glide friction coefficient can be reduced to a value of **μ < 0.2**!

■ Upper trough gliding on the lower trough

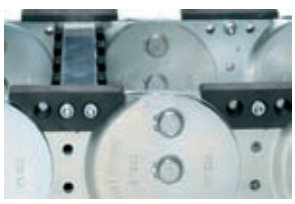

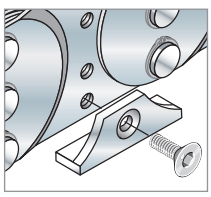

■ Standard glide shoes for S/SX 1250

Tip: Replaceable glide shoes are a very cost-effective solution. When wear occurs, only the glide shoes are replaced and not the complete cable carrier.

Arrangement of cable carrier

Single-sided arrangement of cable carrier

Determining the chain length:

$$L_K = \frac{L_S}{2} + L_B + KR$$

rounded to pitch t

L_B – see technical data for selected chain type!

Opposing arrangement of cable carrier

The chain length is determined as for the single-sided arrangement!

It should be noted that for a moving application, both cable carriers should be designed to the same length and width.

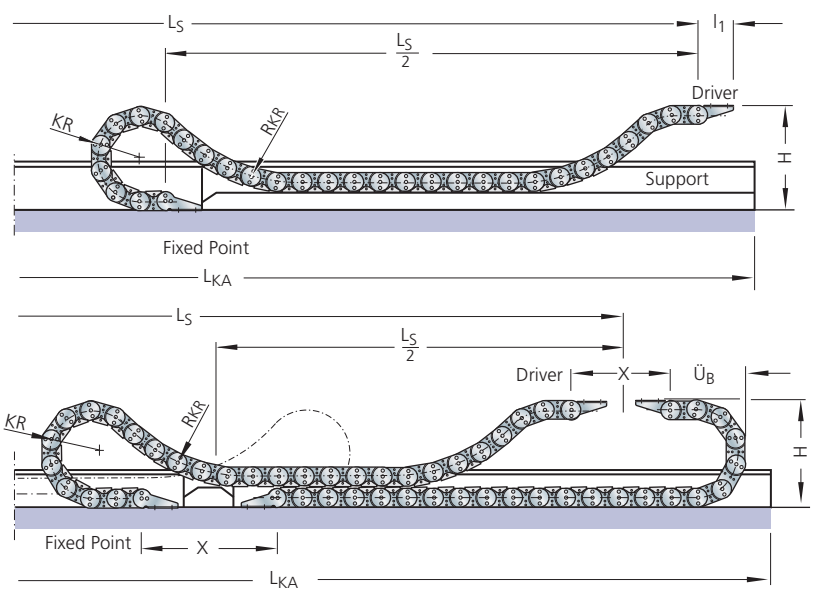

Design information: The support construction of the guide channel needs to have the required stability.

Technical data – dimensional details of guide channels: see page 160.

Because of the many design parameters which need to be considered such an installation as this should be planned and designed by our engineers!

EBV 06

Horizontal arrangement with continuous support structure

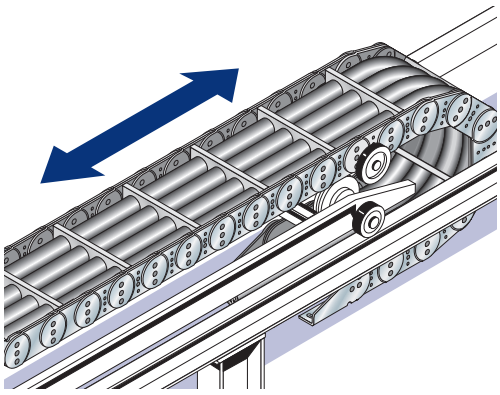

Definition:

If the design conditions no longer permit the installation of an unsupported cable carrier or cable carrier with underslung support rollers with regard to the travel length, the acceleration or the traverse speed, a cable carrier system can be used.

Again, the basic element is the cable carrier.

Cable carrier systems are particularly suitable for use with large travel lengths and high traversing speeds under harsh operating conditions and large loads.

Owing to the multitude of parameters which must be taken into consideration, the system should be designed by our specialists!

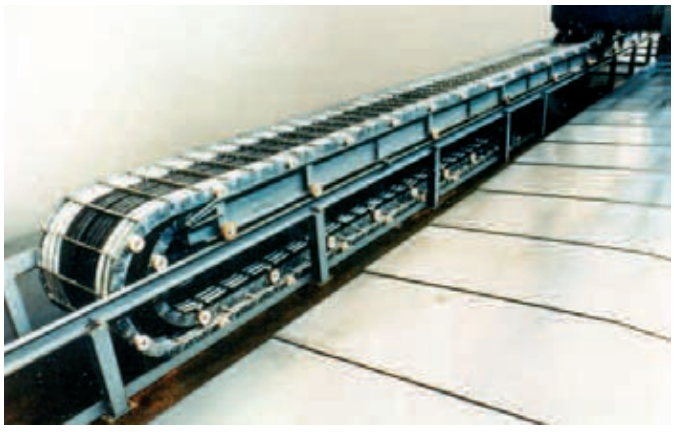

Cable carrier systems – see page 36/37.

Cable Carrier System Type 225

The KABELSCHLEPP cable carrier system is designed either as a one-sided system with one cable carrier or as opposing system with two cable carriers.

The cable carriers with running rollers are supported along their entire length by the support carriage which travels with the system. The supporting construction is moved in both directions using a tension cable system. The friction forces occurring on the system are minimal due to the roller support and roller guide of the cable carriers on the support carriage and of the support carriage on the running frame. To date, KABELSCHLEPP has supplied systems with the following specifications:

- maximum total travel length $L_{S\,max}$ = 222 m
- maximum travel speed v_{max} = 4 m/s
- maximum acceleration a_{max} = 8 m/s²

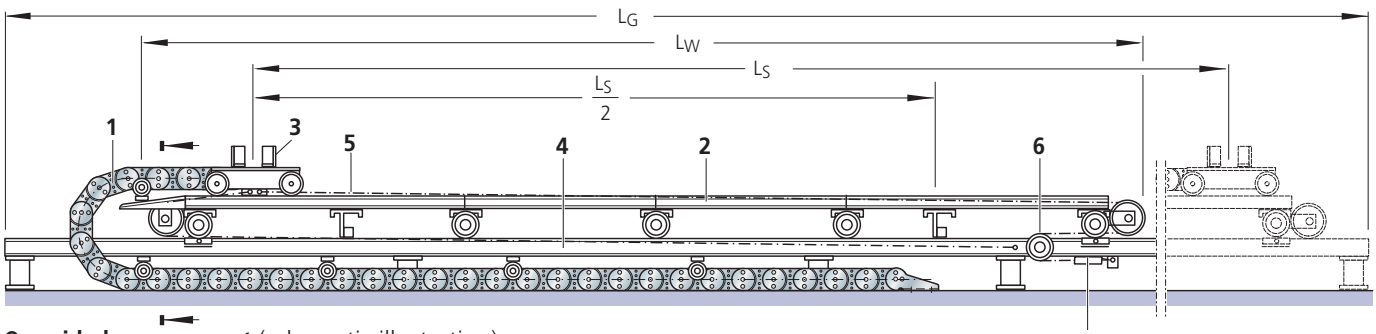

One sided arrangement (schematic illustration)

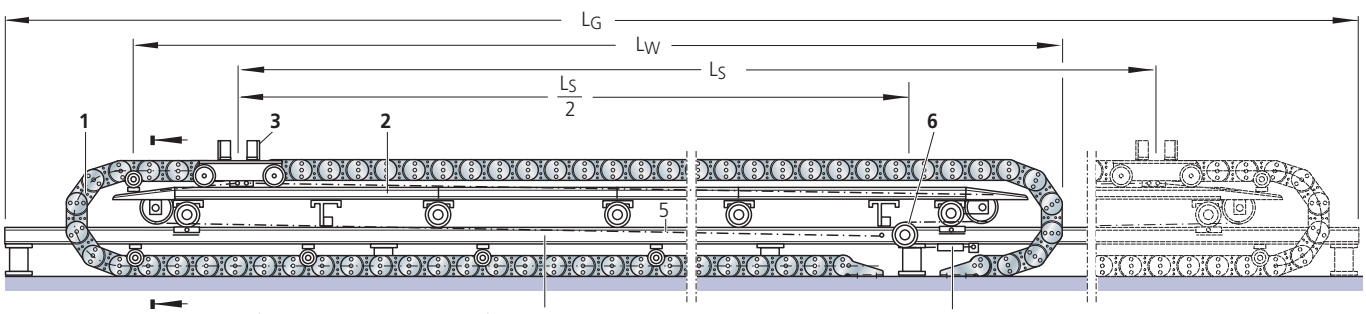

Opposing arrangement (schematic illustration)

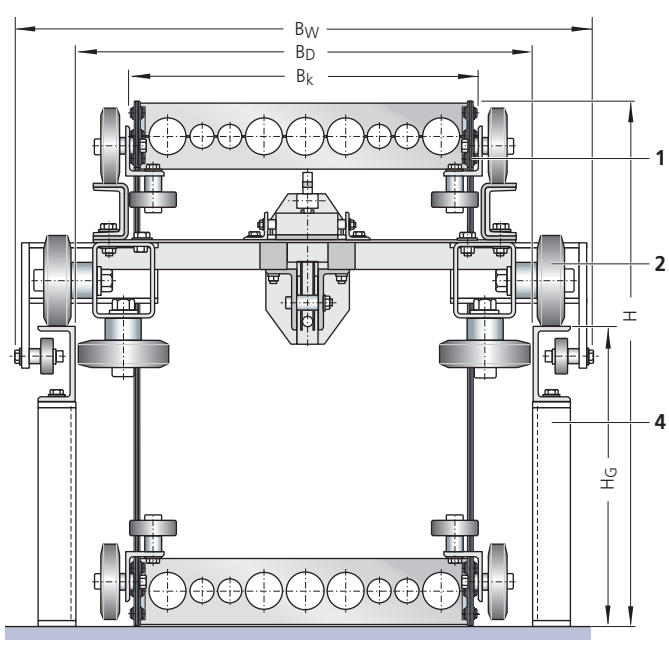

Cross-section view of cable carrier system

The KABELSCHLEPP cable carrier system Type 225 consists of the following components:

1. **Cable carrier(s)** with running and guide rollers attached to the side
2. **Support carriage** with running and guide rollers providing support over the entire length
3. **Driver carriage** with running and guide rollers
4. **Rolling carriage**
5. **Tension cable**
6. **Tension cable roller**
7. **Tensioning device**

Abbreviations:

B_D = Clear width in rolling carriage
B_G = Overall width of rolling carriage
B_k = Width of cable carrier(s)
B_W = Support carriage width (max. width)
H = Installation height of cable carrier(s)
H_G = Rolling carriage height
L_G = Rolling carriage length
L_S = Travel length
L_W = Support carriage length

More information: **www.kabelschlepp.de**

Subject to change.

Cable Carrier System Type 228

For arrangement of cable carriers running in opposite directions!

The cable carriers with running rollers are supported along their entire length by the support carriage which travels with the system. The support carriage is moved by means of a tension cable system.

This cable carrier system requires less width than the Type 225 cable carrier system. The overall width is only slightly greater than the chain width B_k.

General view of the cable carrier system (schematic illustration)

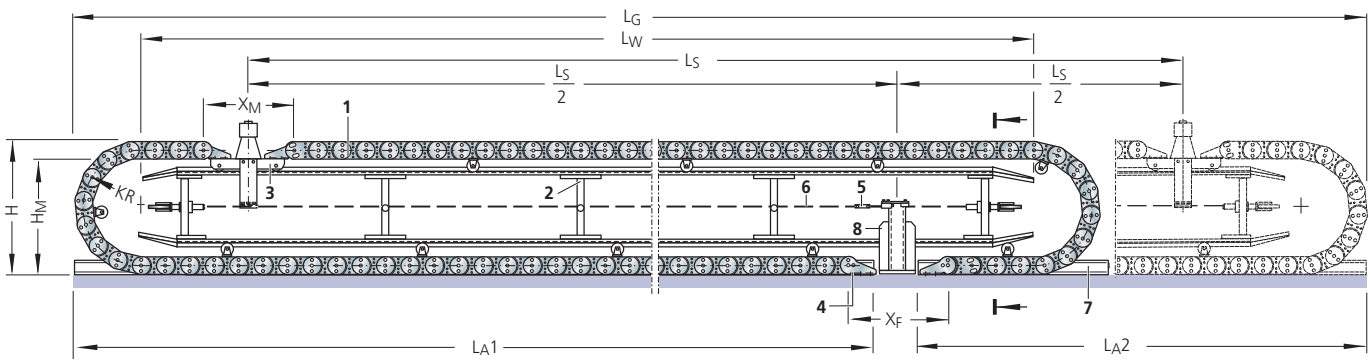

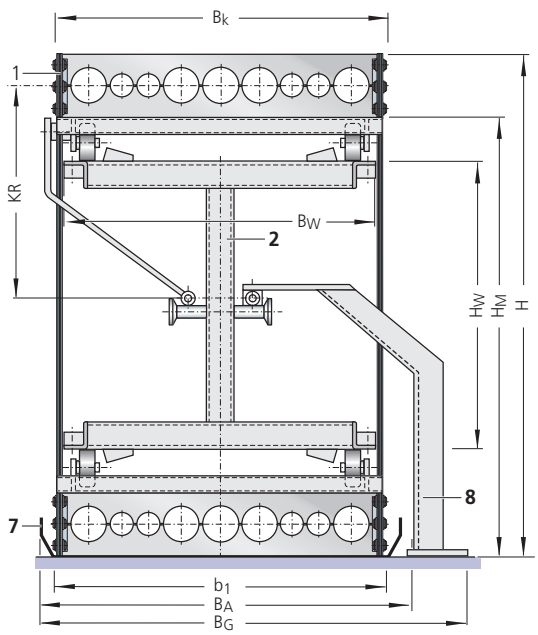

Cross-section view of cable carrier system

The KABELSCHLEPP cable carrier system Type 228 consists of the following components:

1. **Cable carrier(s)** with running rollers
2. **Support carriage**, supporting carrier(s) along their entire length
3. **Driver carriage** with running rollers
4. **Fixed point connection**
5. **Cable tensioning device**
6. **Tension cable** with guiding rollers
7. **Support tray**
8. **Tension cable** anchor at the fixed point

Abbreviations:

B_A = Support tray width
b_1 = Clear width of support tray
B_G = Overall system width
B_k = Cable carrier width
B_W = Support carriage width
H = Installation height of cable carriers
H_M = Driver carriage height
H_W = Support carriage height
KR = Bend radius of cable carriers
L_A = Support tray length
L_s = Travel length
L_W = Support carriage length
X_F = Distance between connections at fixed-point
X_M = Distance between connections at driver

EBV 07

Horizontal arrangement rotated 90° – straight

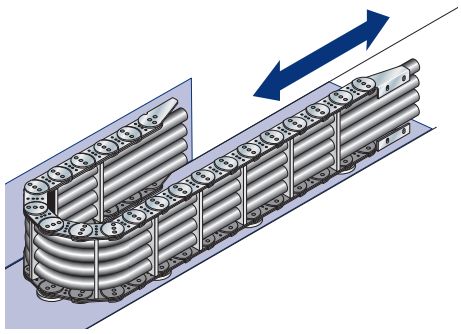

Definition:

This installation variant can be designed with all steel cable carriers.

The cable carrier used in the traditional horizontal arrangement is rotated through 90°. It glides on the outside of the chain band on a tray or in a channel by means of special slides or rollers.

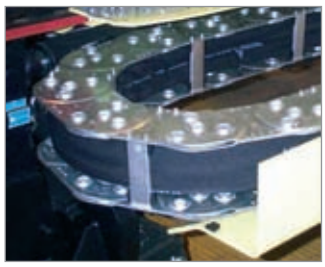

Application:

Generally, cable carriers turned through 90° are used if the height of the installation area is insufficient to allow a horizontal installation.

Make sure that cables/hoses are placed in the carrrier with sufficient clearance from one another.

The best technical solution for this is the hole stay, which allows for the optimum placement of cables/hoses in carrier.

Systems for extended travel lengths

Single-sided arrangement
(with guide channel)

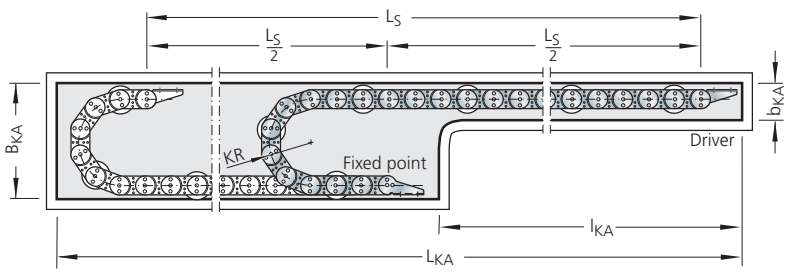

Abbreviations:

b_{KA} = Width of restricted channel

l_{KA} = Length of restricted channel

Opposing arrangement

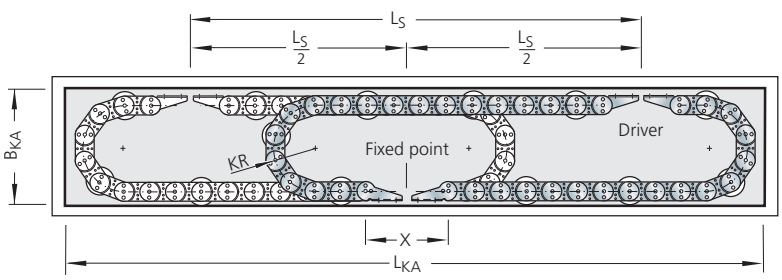

The material and quality of the channel floor must be such that a low-wear process is guaranteed with the lowest frictional forces.

The cable carriers run on plastic gliders, ball castors, steel rollers or steel rollers with rubber tyres.

Distance glides or rollers are mounted to the outside and/or inside of the chain band. These prevent wearing of the channel walls and guarantee smooth operation of the system (see installation variant EBV 09).

EBV 09

Horizontal arrangement rotated 90° – circular

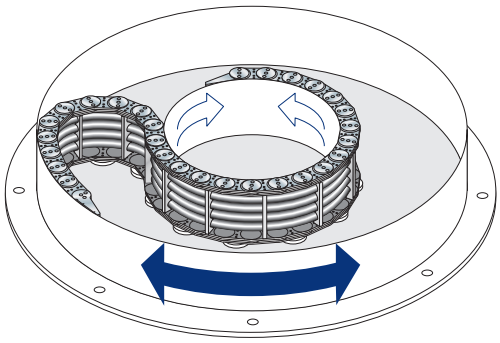

Definition:

In this arrangement the cable carrier is rotated through 90° for use with machine components performing circular operations.

Through the combination of bend radius KR and reverse bend radius RKR, the cable carrier deliberately moves in two precisely defined circular movements.

The carrier system is mounted to the inner and outer ring of a guide channel. The moving ring (inner or outer ring) is the driver for this installation.

Application:

Cable carriers in this configuration will always have to be guided in a channel. The driver can be fitted either on the inside or the outside.

In order for the carrier system to perform a circular motion, a special chain link design is necessary.

The circular – rotated through 90° cable carriers either run on round gliders, ball castors, steel rollers or steel rollers with rubber tyres attached to the lower chain band in a sheet steel channel.

Support and guide elements (possible combinations):

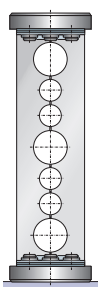

Gliders on upper and lower chain band*

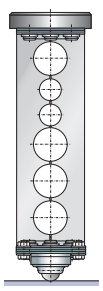

Gliders on upper and **ball castors** on lower chain band

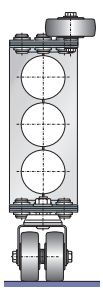

Gliders on upper and **double guiding rollers** on lower chain band

*) for installations with insufficient carrier installation height H_E the glider on the upper chain band can be omitted.

The sheet steel guide channel can be delivered in two different versions:

- **Recessed channel**
  for the installation of a single-sided carrier system.
- **Continuous channel**
  for the installation of opposing carrier systems

Spacers for gliders or rollers are mounted to the inside or outside of the upper chain band in order to prevent the cable carriers dragging along the channel walls and to ensure smooth operation of the installation. With long travel lengths or particularly tall installations, a guide carriage is used to stabilize the cable carriers.

Single-sided arrangement
with detached guide channel
(schematic illustration)

Angles of rotation of up to **600°** are possible in a single-sided arrangement!

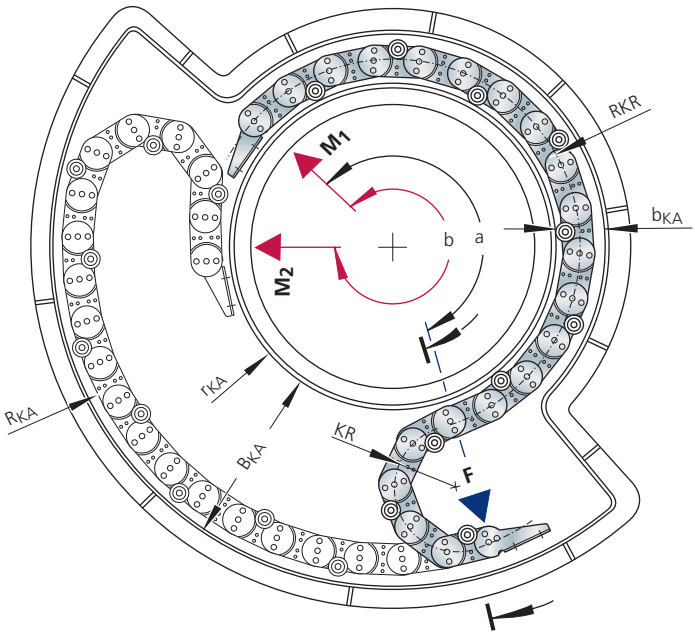

Abbreviations:

α = Fixed point angle
β = Travel length
B_E = Width of cable carrier
b_{KA} = Channel width in the narrow section
B_{KA} = Channel width
H_E = Height of cable carrier
H_{KA} = Height of guide channel
KR = Bend radius
R_{KR} = Reverse bend radius
r_{KA} = Internal channel radius
R_{KA} = External channel radius
F = Fixed point
M 1 = Driver – end position 1
M 2 = Driver – end position 2

Opposing arrangement
with guide carriage
(schematic illustration)

Angles of rotation of up to **500°** are possible with the opposing arrangement!

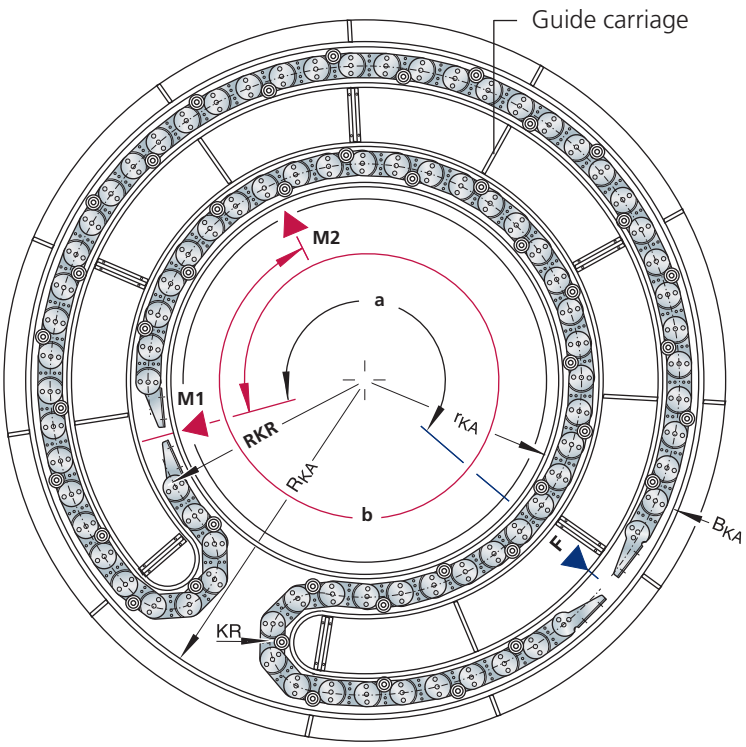

Channel cross sectional view

Owing to the numerous design options available with this installation variant, please contact us for assistance.

We can supply the complete solution: ready to assemble, installation included if required.

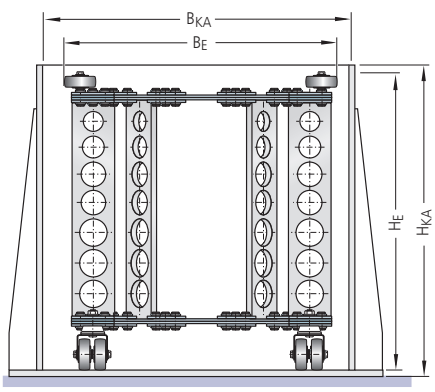

More information: **www.kabelschlepp.de**

Subject to change.

EBV 10

Vertical arrangement standing

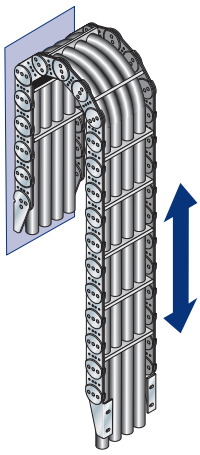

Definition:

Mount the cable carrier in a way to ensure parallel movement of the active and passive runs.

No or only the minimum pre-tension should be applied to the cable carrier.

Calculation of the chain length – see page 27.

Connection elements

The connection elements have to be mounted to the machine (fixed-point/driver) to prevent the cable carrier from tilting to the outside, i.e. the connection has to be **rigid**.

$H = 2\ KR + h_G$

The distance between the fixed-point and driver connection depends on the selected bend radius.

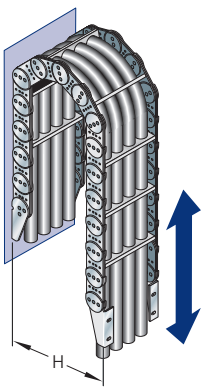

Support

Generally, the cable carrier has to be supported at the fixed point and on the outside of the driver.

The length of the support is determined by the additional load, degree to which the carrier is filled, travel length and the selected cable carrier.

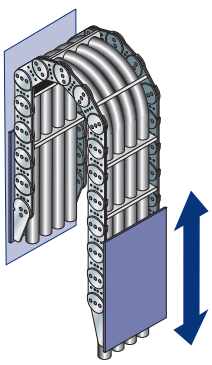

Direction of movement

In some instances, the complete unit also moves **crosswise** to the carrier standing vertically.

In these cases the carrier needs to be equipped with the appropriate guides to follow this movement.

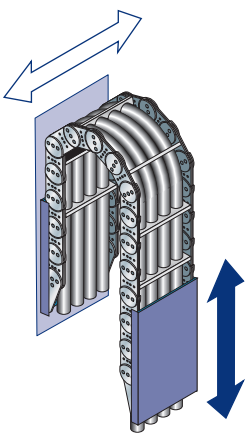

EBV 11
Vertical arrangement hanging

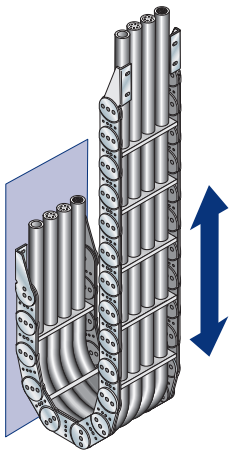

Definition:

We differentiate between:

Vertical hanging arrangement
Direction of movement of cable carrier:
vertical only

In the case of a purely vertical movement, the cable carrier can be installed without special side supports.

Calculation of the chain length: see page 27.

Vertical arrangement – hanging

Direction of movement of cable carrier:

vertical/horizontal combined

Even with a combined vertical/horizontal movement, the cable carrier can be installed without special side supports.

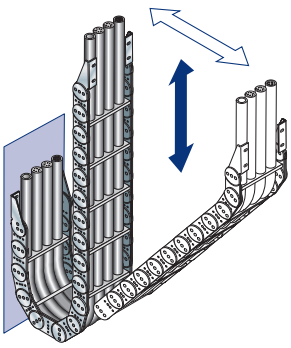

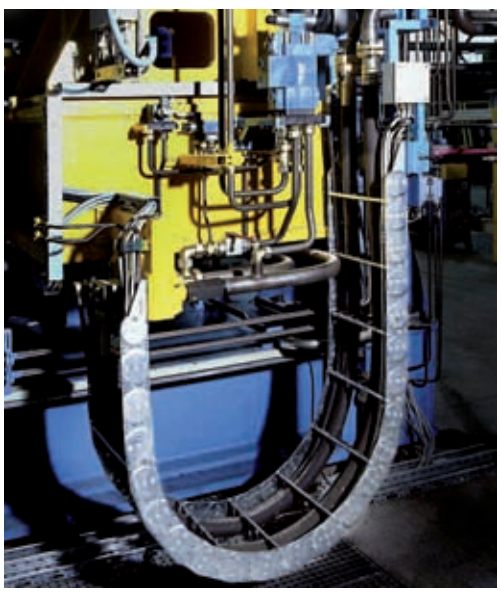

Vertical arrangement – hanging

Direction of movement of cable carrier:

vertical only

If the entire unit moves crosswise and/or along to the hanging cable carrier, an additional side guide must be fitted to the longer cable carriers.

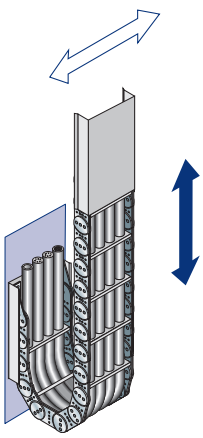

Generally, the following applies to the vertical hanging arrangement

- The cable carrier must always be installed without any or with only minimal pretension.
- Extreme care should be taken when fixing the cables/hoses to the driver and to the fixed point.

Please comply with the **Guidelines for installing cables/hoses in KABELSCHLEPP cable carrier systems**.

EBV 12
Horizontal/vertical arrangement combined

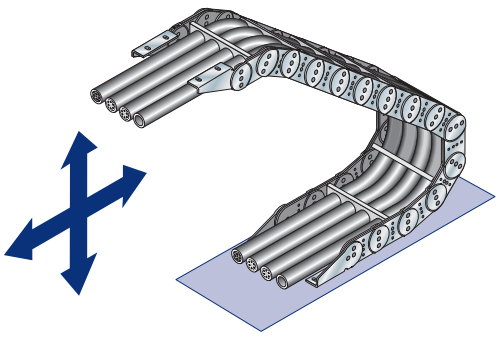

Definition:

KABELSCHLEPP cable carriers can also be utilized for combined horizontal/vertical motion ("Multi-axis").

This arrangement requires no special structural preconditions.

EBV 13
Vertical arrangement looped

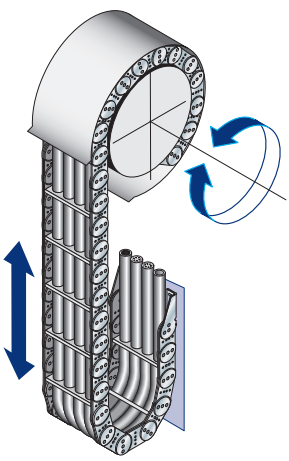

Definition:

For this kind of arrangement cable carriers are available in all standard versions.

Depending on spin/acceleration appropriate guide plates should be provided to ensure optimal functionality (see illustration).

EBV 14
Vertical arrangement hanging with bearing bolts

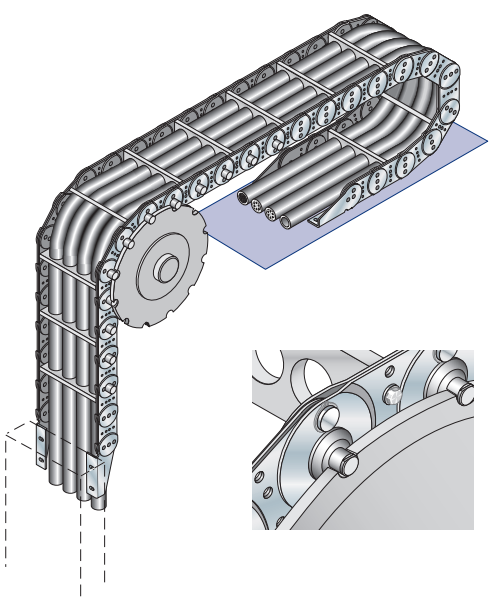

Definition:

This vertical arrangement of the cable carrier with additional support elements attached offers the option of using the **cable carrier as a lifting device** for machine components attached to its elements (e.g. control panels, manipulators etc.).

The cable carrier is driven by sprocket wheels.

The pitch circle radius must be equal to or larger than the selected bend radius of the cable carrier.

This installation is either motor driven or a balance weight is used.

Owing to the multitude of design options inherent to this kind of configuration, please consult our technical team about this installation variant.

Below are some further options which are possible in connection with the installation variants described.
If the cable carrier cross section is inadequate to accomodate the number of cables/hoses, the following installation options are available:

A1
Adjacent arrangement

Possible with all cable carriers and hoses.

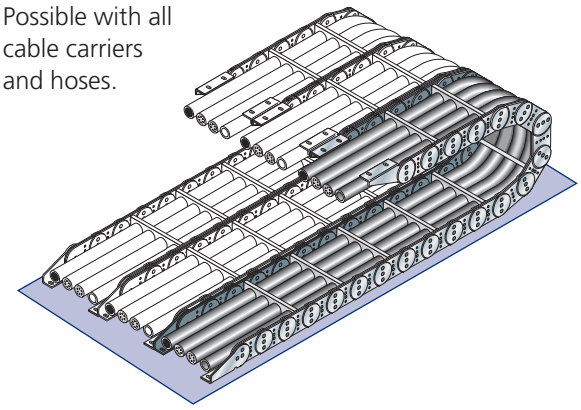

A3
Nesting arrangement

Possible with all cable carriers and hoses.

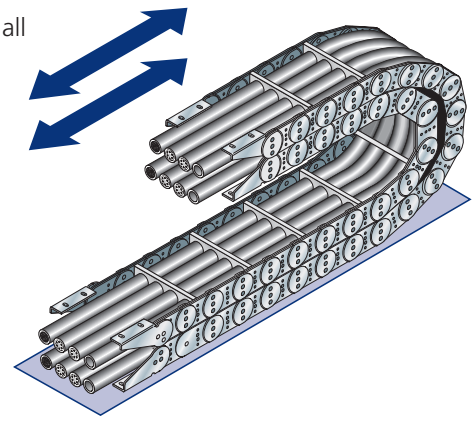

A2
Multi-band arrangement

Possible with all cable carriers.

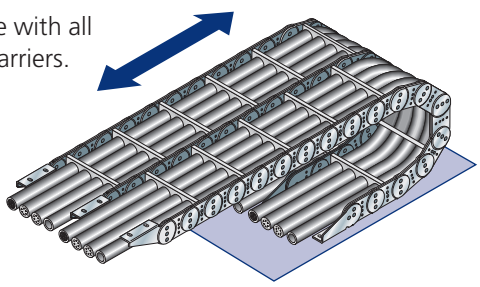

If the available space will not allow a cable carrier system to be installed because of the required width, a **nesting** or **opposing** system can be arranged.

A4
Opposing arrangement

Possible with all cable carriers and hoses.

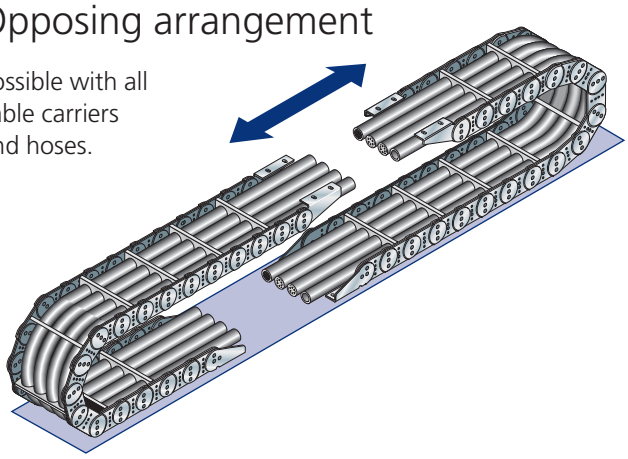

Laying guidelines for cables and hoses.

Laying cables in cable carriers must be made extremely carefully.

Hoses must be highly flexible and may only contract or expand slightly in length when under pressure.

Information on the properties of hoses with regard to length can be found in the hose manufacturer's catalogue.

Basically, only cables which are suitable for use in cable carriers, such as e.g. KABELSCHLEPP LIFE-LINE cables, should be used.

LIFE-LINE
cables for cable carriers

The cables and hoses must be able to move freely inside the cable carrier. They must neither be fixed in the cable carrier or bundled together.

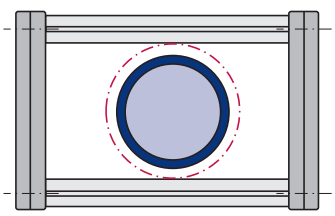

The following are guide values for the dimensions of the required free space:

- **for round cables:**
  10 % of the cable diameter
- **for flat cables:**
  10 % each of the cable width/ cable thickness
- **for hoses:**
  20 % of the hose diameter

Weight distribution for the cable laying

When laying the cables, please ensure that the cable weight is distributed symmetrically across the width of the cable carrier.

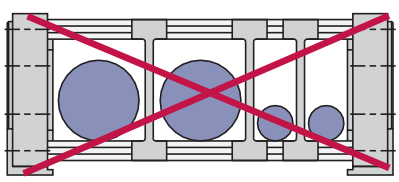

■ Unfavorable weight distribution

The maximum service life of the cable carrier can be achieved by uniform loading.

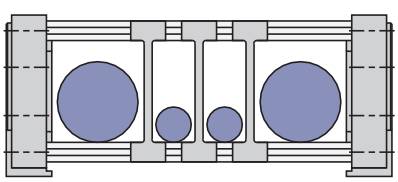

■ Favorable weight distribution

Do not raise looped cables.

When cutting the cables for laying in the cable carrier, the coil must be arranged tangentially and not in loops for the cutting to length.

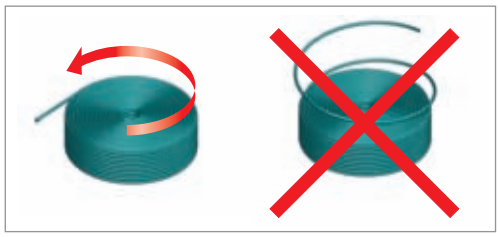

Uncoil drum commodities without twisting.

The drum product must be uncoiled without twisting and cut to length when cutting the cables for installing in the cable carrier.

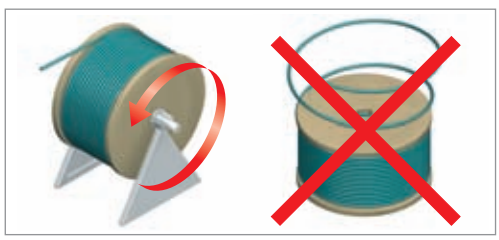

Cables lying next to each other with greatly differing diameters should be separated using dividers. Cables with greatly differing diameters lying directly next to each other must be avoided.

If laying several cables without separators is unavoidable, care should be taken that the remaining free passage height is lower than the smallest cable diameter. Only thus can the cables be prevented from getting wrapped around one another.

In the case of multi-layer laying, we recommend providing a height separation between the individual layers for electrical cables.

Custom-made hole stays or separation by means of dividers prevent cables lying next to each other from rubbing against each other. In many cases, laying every cable in a separate chamber is advantageous.

A height separation must always be provided between flat cables stacked in several layers.

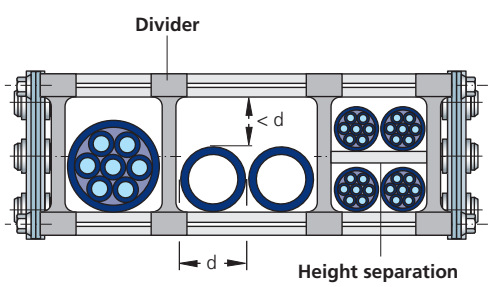

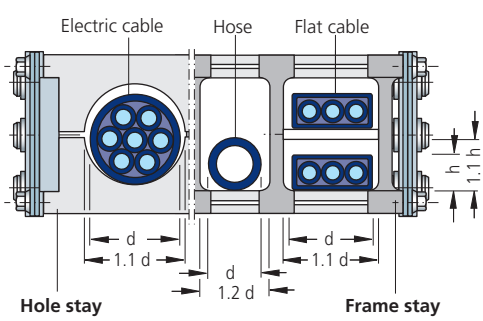

Highly flexible, thin cables with low bending strength should be installed loose side by side and arranged in a protective sheath. The cross section of the protective sheath should be chosen considerably larger than the total of the individual cable cross sections.

As a reference value for measuring the cross section, each cable should have a clearance of approx. 10 % of its diameter.

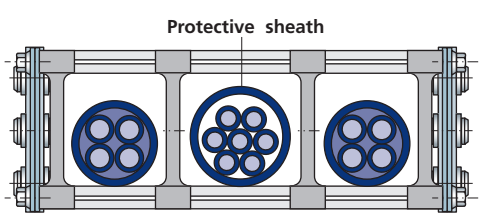

Regardless of the kind of divider used for chain stay cross-sections, the following details have to be taken into consideration:

Pressure hoses must be able to move freely, as they may contract or expand with pressure fluctuations.

Contraction or expansion can only be compensated for in the bend radius section of the carrier.

In order to calculate the necessary clearance, please refer to hose manufacturers' information with regard to linear expansion or contraction.

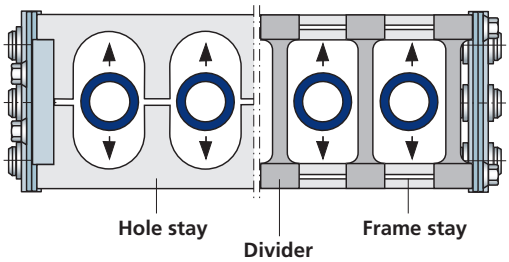

Basically, it must be ensured that the cables can take the bend radius KR without any force being necessary.

They must be able to move freely in the longitudinal direction and must not exert any tensile forces on the cable carrier in the chain bend.

In the case of multi-layer laying, the cables must be drawn into the cable carrier in such a way that they have a corresponding clearance between each other even in the bend of the chain.

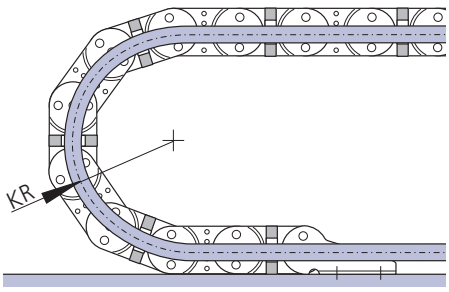

When there is a cluster of electrical cables in covered cable carriers or in cable carrier tubes, the current carrying capacity of the cables must be designed in accordance with the applicable standards, regulations and recommendations so that the maximum permissible temperatures for the corresponding cable materials and the material of the cable carrier are not exceeded.

Please note that this is a closed system (limited convection) during the design.

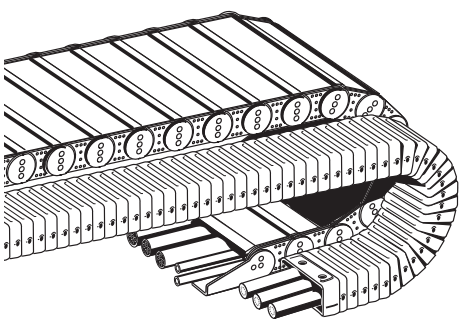

Strain relief of cables and hoses.

The strain relief of the cables depends on the type of cable, the length of the cable carrier and the installation position:

Generally, it must be ensured that the stress occurs on a large area on the outer sleeve so that individual cores in electrical cables are not crushed and that displacement of the cables is not possible.

- Cables with high flexibility and low inherent stiffness must have strain relief **at the fixed point and at the driver**. Otherwise there is the risk that they will be pressed out between the chain stays.
- In the case of vertically hanging cable carriers, the cables must also have strain relief **at the fixed point and at the driver**.
- In the case of travel lengths within the unsupported area of the cable carrier, electrical cables should preferably have strain relief **at the driver and at the fixed point**.
- Pressure hoses with tailpieces which are bolted in the immediate vicinity of the driver and the fixed point do not need strain relief. If the threaded connection is further away, strain relief analogous to the electrical cables is recommended.

In the case of long travel lengths in the sliding arrangement, cables should have strain relief according to the following procedure (except cables with low inherent stiffness):

Strain relief at the driver/end of the chain

After positioning the chain driver (moving chain end) in the **thrust end position**, the cables on the chain end to be moved have strain relief.

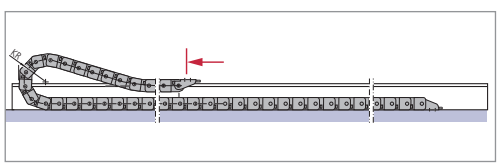

Correct cable length in the chain

After new positioning of the chain driver (moving chain end) in the **tension end position** of the chain, the cables in the chain bend are checked for tension-free length and if necessary "pushed into the chain".

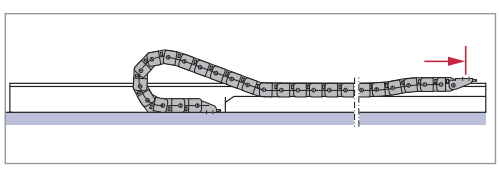

Strain relief at the fixed point/chain end

The cables finally have strain relief at the fixed point/chain end with this tension-free "insertion length".

Long service life of the cables.

Frame stays made of aluminium.

Low jacket wear is an essential requirement for a long service life of the cables in the cable and hose carrier system. As well as the jacket material, the stay material as cable support is also responsible for the jacket wear.

We have examined the wear of different cables depending on the stay material in extensive series of tests.

Thereby, already existing test results have been confirmed several times. Aluminium as a support is very gentle on the sheathing of cables. This result is independent of the cable manufacturer and applies to the most common jacket materials.

As well as the good abrasion index, aluminium is particularly suitable as stay material due to its **high strength for a low intrinsic weight**. Chain widths up to 1000 mm can be achieved without the chain being particularly stressed due to additional weight.

Further information about the material characteristics of the stay material can be found on page 50.

Save costs due to low jacket wear for cables

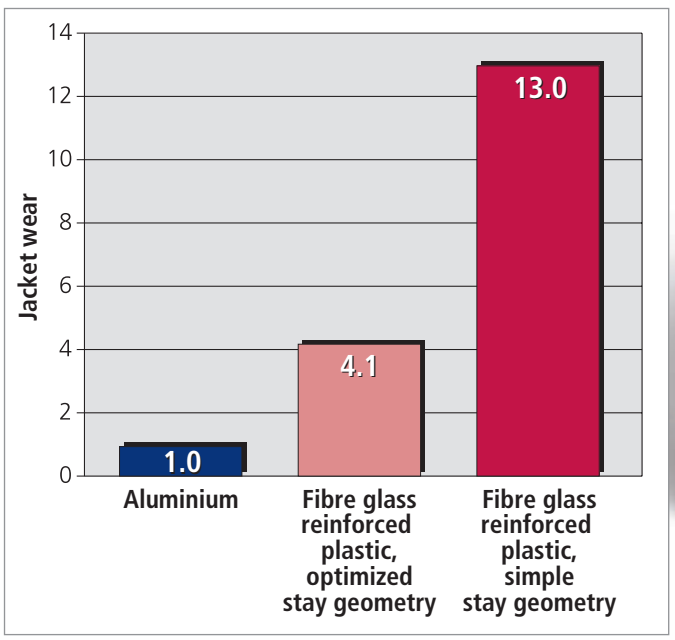

■ Jacket wear of PVC cables against stays scaled against aluminium

TIP: Jacket wear on aluminium stays

The jacket wear test shows up to 13 times greater jacket wear of PVC cables on plastic stays as compared with aluminium stays.

Material specifications.

The cable carrier material depends on its intended application. Depending on the expected level of corrosion, we can offer various materials. The zinc galvanized and black coated standard versions can be used for low loads. The standard design, in zinc-plated steel, cen be used for light loads. For higher loads the carriers can be chrome-plated. In the case of extremely high specifications the high grade stainless steel option is available.

	Chain band material				
	Steel with zinc coating (standard for S series)	Steel with black special coating (standard for LS series)	Stainless steel	Stainless steel	Stainless steel
	St	Sb	ER 1	ER 1S	ER 2
Corrosion resistance	limited		good corrosion resistance in natural environment media, however without chlorine and salt concentrations (no halogens and no sea water)	Excellent corrosion resistance in the acids environment, for phosphorus and organic acids and media containing chlorides. Significantly better corrosion resistance than ER 1. Insensitive to stress corrosion cracking. Good resistance to sea water.	Excellent corrosion resistance in the acids environment, for phosphorus and organic acids and media containing chlorides. Significantly better corrosion resistance than ER 1. Insensitive to stress corrosion cracking. Good resistance to sea water.
Magnetizability	yes		no	no	present
Mechanical characteristic	high strength, good load-bearing capacity		low strength as standard material; reduced by approx. 30 % for unsupported lengths	low strength as standard material; reduced by approx. 30 % for unsupported lengths	high strength, good load-bearing capacity (as for standard material)
Applications	All application areas which do not require any particular corrosion protection, in particular general mechanical engineering and plant construction, and application areas in which no plastic cable carriers are permitted due to their load-capacity, loading, elasticity and environmental conditions.		Application areas as for the standard material, however with particular requirements for the corrosion resistance.	Application areas as for the standard material, however particularly suitable for environments with **salt concentrations** such as, e.g. port facilities. Also **suitable for foodstuffs**.	Typical purposes are: chemicals and petrochemicals industry, offshore, parts and apparatus of the chemical industry, textile industry, cellulose manufacture, dye works, and in the photographic, paint, synthetic resin and rubber industries, shipbuilding

Material table: Steel cable carriers

Material	Series			
	LS	LSX	S	SX
St			■	
Sb	■			
ER 1		■		■
ER 1S		■		■
ER 2				■

Material information: Standard stay systems made of aluminium alloy

The advantages of alloys lie in the combination of mechanical, physical and chemical properties of these materials.

Material: aluminium alloy

- **light, strong, hard, smooth and resistant**
- **modern design**
- **optimum friction and wear characteristics**

Technical Data:

Density:	2.7 g/cm^3
Modulus of Elasticity:	70 kN/mm^2
Electrical conductivity:	28 – 34 m/W mm^2
Thermal conductivity:	1.9 – 2.1 W/k · cm
Heat expansion coefficient:	23.4 cm/cm k 10^6
Strength:	215 N/mm^2
Elongation after fracture:	12 %

Light metal alloys show no tendency towards brittleness at low temperatures.

Application: Hole stays, frame stay profiles, profiles to separate the cables/hoses in the chain cross-section

Stay systems using special materials are also available for applications with extreme requirements.

Chemical resistance of the standard plastic parts.

The table on the right shows that plastic components should not be used when exposed to acid agents.

Please contact us regarding materials not listed in the table!

Standard material:
KS 7422
Standard color: black

Agent	Percentage of mass	Temperature °C	Resistance
Acetone	TR		●
Formic acid	10		⊗
Ammonia (aqueous)	TR	+ 70	□
Ammonia		+ 20	●
Benzine	H	+ 85	●
Benzol	H		●
Bitumen	H		●
Boric Acid (aqueous)	H		●
Butyric acid	20		●
Calcium chloride (aqueous)	GL	+ 23	●
Chlorine, chlorinated water			●
Chlorine water	H		⊗
Chromic acid (aqueous)	10		⊗
Diesel oil	H		●
Acetic acid aqueous, conc.	95		⊗
Acetic acid (aqueous)	10		□
Ethanol	40		●
Ethyl acetate	TR		●
Paints & lacquers			●
Greases and waxes	H		●
Liquid petrol. gas (DIN 51622)			●
Fluorinated hydrocarbons			●
Formaldehyde and polymac.	TR		●
Formaldehyde (aqueous)	30		□
Hydraulic oils	H		●
Potassium hydroxide	10		●
Potassium chloride (aqueous)	10		●
Potassium nitrate (aqueous)	10		●
Methyl acetate	TR		●
Milk	H		●
Lactic acid (aqueous)	10		●
Lactic acid	90		⊗
Mineral oil	H		●
Sodium carbonate (aqueous)	10		●
Oil/edible and lubricating	H		●
Oleic acid	H		●
Paraffin, paraffin oil	H		●
Polyester resins	H		●
Propane gas, propyl. hydride	TR		●
Mercury	TR		●
Hydrochloric acid (aqueous)	>20		∇
Hydrochloric acid	2		⊗
Lubricants, edible fats	H		●
Vaseline	H		●
Tartaric acid (aqueous)	10		●
Tartaric acid	50		□
Xylene	TR		●
Sulfuric acid	98		∇

Abbreviations:

● resistant

□ limited resistance

⊗ non-resistant

∇ soluble

G = saturated diluted solution

H = commercial grade

TR = technically pure

Environmental influences.

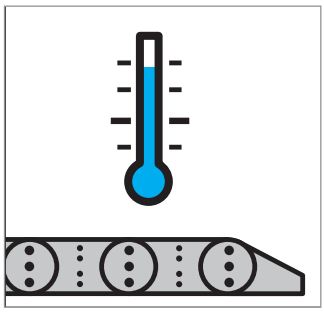

Temperature

The cable carriers, depending on the stay type,
can be used in the following temperature ranges:

Stay type	Constant temperature range
Frame stays with plastic elements	-25 °C to +100 °C
Bolted aluminium stays	-25 °C to +250 °C
Bolted tube stays (Complete steel construction, galvanized)	-25 °C to +400 °C
Tube stays (complete SX version)	-25 °C to +600 °C

Please comply with the permissible temperature range of the cables/hoses to be installed!

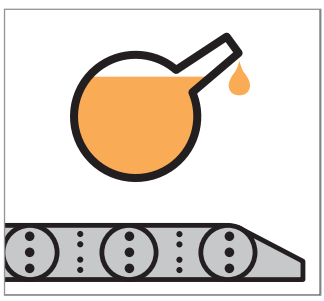

Chemical Influences

KABELSCHLEPP cable carriers with steel chain bands are resistant to many chemical influences.

Please note that the cable carriers made of galvanized steel and coated black are not resistant to acids. If the cable carriers are to be used in a harsh environment, we recommend the type with chain bands made from rust-and acid-resistant steel.

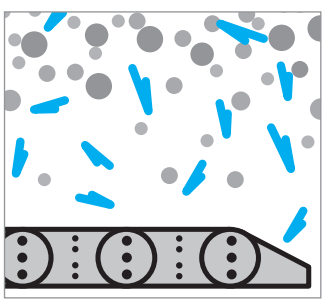

Dust/Chips

Protection for the power supply lines against dust, contamination or other mechanical influences is provided for our cable carriers with the aluminium cover system or steel band cover.

Stays with aluminium covers – see stay variant RMD

Steel band covers – see page 166.

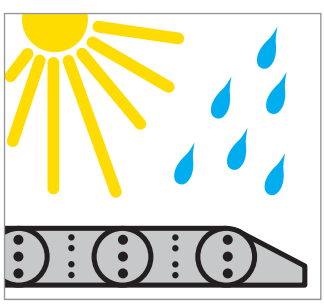

Humidity/UV Influences

Steel cable carriers can also be used in humid areas or outside,
since they are corrosion-resistant.

The plastics used for the dividers are UV resistant.

Explosion Protection

Cable carriers with chain bands made of steel can be used in potentially explosive atmospheres. The cable carriers must be grounded via the end connectors.

Systems of this type should be planned by our technicians. Please do get in touch with us, we would be happy to advise you.

Reduce your design time.

Access our 2D and 3D data on the internet.

Accelerate your design processes with our 2D and 3D models from the CAD component libraries. New product data has been added to the **CADENAS** and **TRACEPARTS** component libraries.

Download all product data from both libraries for free. Native data and all conventional export formats are available for all conventional CAD systems.

More information:
www.kabelschlepp.de

traceparts

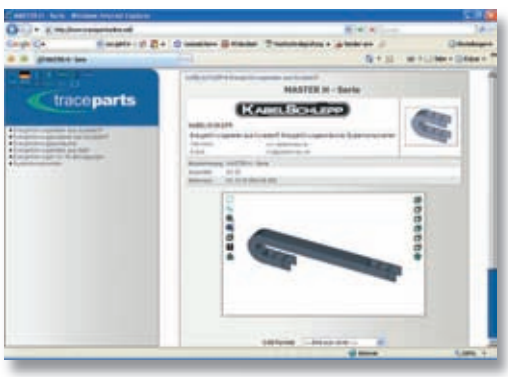

CADENAS

- Easy to connect to PDM and ERP systems
- The PARTsolutions catalogue can be easily accessed using a button in the Autodesk Inventor
- Detailed cable carrier models available

TRACEPARTS

- Most KABELSCHLEPP cable carriers are available
- Worldwide, the only CAD library with "CAA" (CATIA) partner status
- Also available on a free CD – contact us to obtain it

KABELSCHLEPP and EPLAN.

LIFE-LINE cable database for EPLAN.

EPLAN has developed over more than 20 years into a leading E-CAD system and has become more or less established as a standard in some branches.

As a provider of continuous bending highly flexible electrical cables for cable and hose carriers, we offer you the KABELSCHLEPP LIFE-LINE cable databases as a superior tool for optimising your daily work with EPLAN.

The databases are optimized for use in EPLAN5 and for transmission according to EPLAN P8 electric.

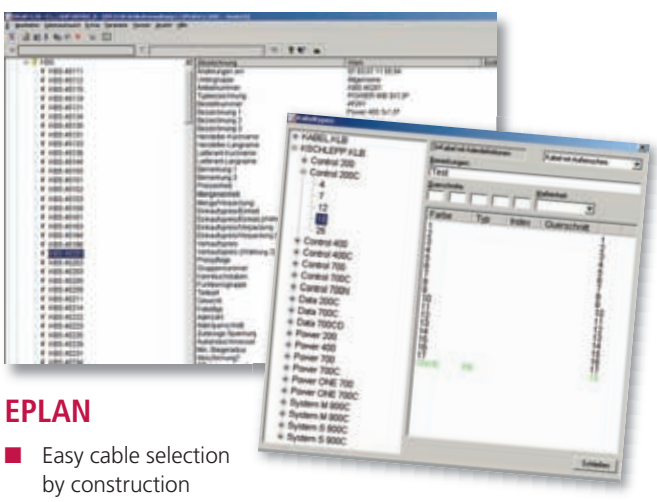

EPLAN

- Easy cable selection by construction
- Automatic addition of core number, cross-section and core colour
- Complete data for parts lists and other evaluations

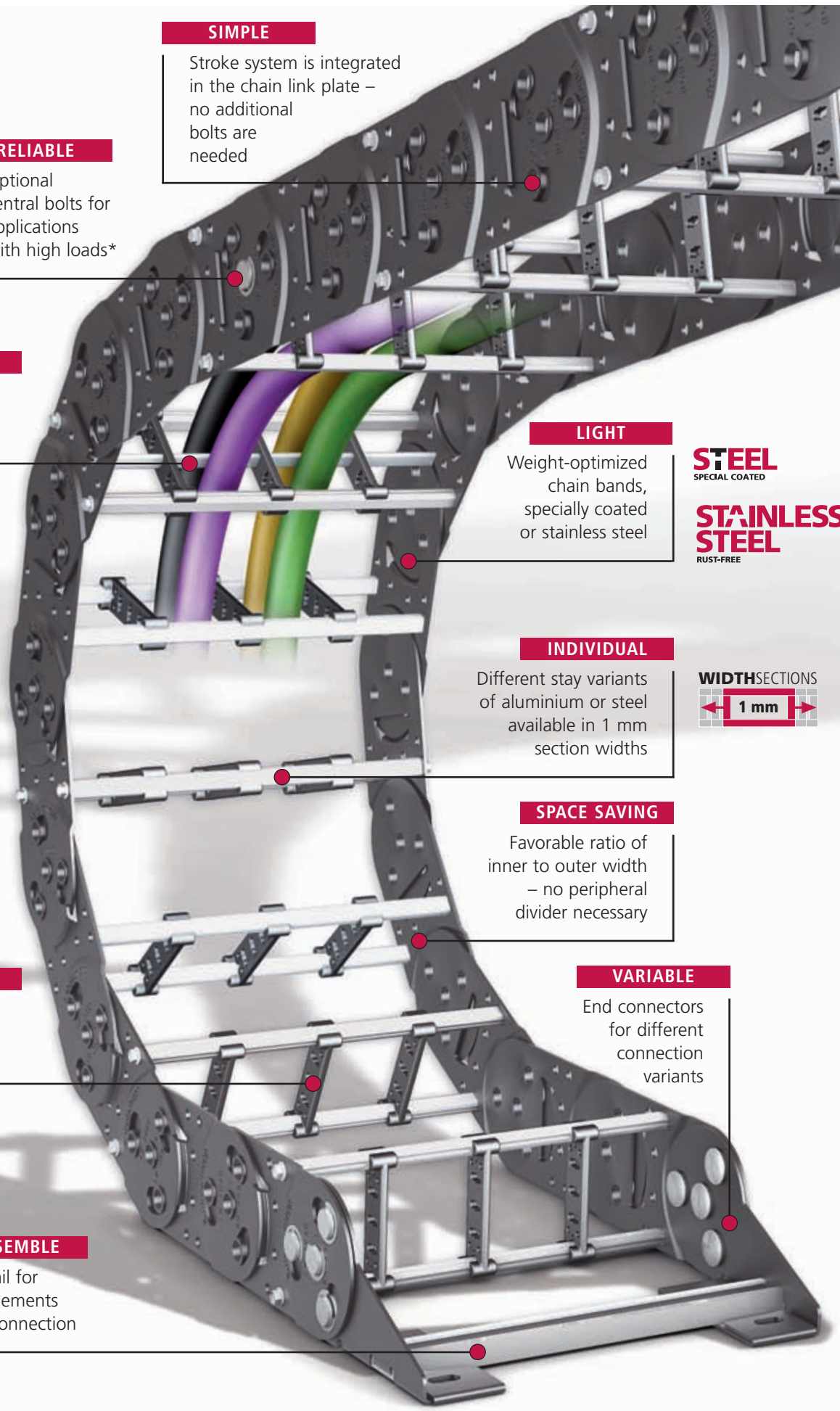

SIMPLE

Stroke system is integrated in the chain link plate – no additional bolts are needed

RELIABLE

Optional central bolts for applications with high loads*

FLEXIBLE

Various cable separation options

LIGHT

Weight-optimized chain bands, specially coated or stainless steel

STEEL
SPECIAL COATED

STAINLESS STEEL
RUST-FREE

INDIVIDUAL

Different stay variants of aluminium or steel available in 1 mm section widths

WIDTHSECTIONS
1 mm

SPACE SAVING

Favorable ratio of inner to outer width – no peripheral divider necessary

VERSATILE

Dividers of plastic or steel

VARIABLE

End connectors for different connection variants

EASY TO ASSEMBLE

Optional C-rail for strain relief elements fixed in the connection

Use our free project planning service.

Subject to change.

Lightweight steel cable carriers

LS Series

Chain bands made of specially coated steel

STEEL
SPECIAL COATED

LSX Series

Chain bands made of rust and acid resistant steel

STAINLESS STEEL
RUST-FREE

WIDTHSECTIONS
1 mm

LS/LSX
Weight
optimized
- 40 %

LS 1050
at least
20% less expensive
than S 0950 with stay variant RS

Economically priced, light steel chains – with improved dynamic characteristic values

The chains are very light and yet very stable due to the weight-optimized link plate design. The unsupported length for the LS series is significantly higher as compared with plastic chains of the same size.

This makes the LS/LSX series approx. 40 % lighter than our steel chains of the S/SX series:

- **weight-optimized, single-part chain link plates**
- **integrated radius and pre-tension stops – no separate bolts needed**

Further details about chain design can be found on page 22.

Many stay variants with different stay cross sections make possible individual adaptation of the chain to the application. The laid cables and hoses can be optimally separated using the wide range of dividers and height separators.

A steel band cover for protection of the cables is possible on request.

Overview of dimensions

Type	Height h_i	Clear width $B_{i\,min}$	Clear width $B_{i\,max}$	Chain width $B_{k\,min}$	Chain width $B_{k\,max}$	Pitch t	Page
LS/LSX 1050	58	84	584	100	600	105	57

Dimensions are dependent on the stay variant. Multi-band chains are possible for larger widths.

*** Design guidelines for central bolts and stay arrangement:**
– Chain length > 4 m: central bolts **or** stay arrangement on every chain link necessary
– Chain width B_{St} > 400 mm: central bolts **or** stay arrangement on every chain link necessary
– Use of support rollers: central bolts **and** stay arrangement on every chain link necessary

Use our free project planning service.

Subject to change.

Type **LS 1050**

Steel chain bands

Type **LSX 1050**

Stainless steel chain bands

2D/3D-Data
www.kabelschlepp.de/cad

Materials

Chain bands and end connectors:
LS 1050: Steel with special coating
LSX 1050: grade rust and acid resistant **steel**

STEEL SPECIAL COATED
STAINLESS STEEL RUST-FREE

Standard stay material: aluminium alloy*
Dividers: plastic**
➔ see material properties, page 50

Chain width

customer-specific
available in 1 mm width sections

WIDTHSECTIONS 1 mm

Chain pitch

105 mm

Bend radii

various **standard bend radii**
from 105 – 430 mm; intermediate radii upon request

* See description for the respective stay variant for details.
** Stay variant RR: Dividers of steel.

Stay variant RS

Clearance height h_i = **58 mm**
➤ **from page 59**

Stay variant RV

Clearance height h_i = **58 mm**
➤ **from page 61**

Stay variant RMA

Clearance height $h_{i\,max}$ = **200 mm**
➤ **from page 65**

Stay variant RR

Clearance height h_i = **54 mm**
➤ **from page 66**

Stay variant LG

max. **hole Ø = 48 mm**
➤ **from page 67**

Type LS 1050 / LSX 1050

Rolling schematic illustration unsupported arrangement

Chain pitch t = 105 mm

Height h_G = 80 mm

Connection height H = 2 KR + 120 mm

Connection length l_1 = 117 mm
(see connection dimensions)

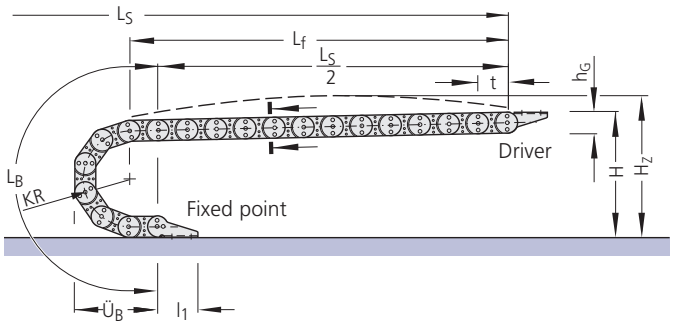

A flat and level surface is required for the cable carrier to extend and retract reliably.
Under certain conditions, a support tray needs to be installed (see page 163).

Variable sizes

depending on the bend radius

Dimensions in mm

Bend radius	105	125	155	195	260	295	325	365	430
Bend length L_B	540	603	697	823	1027	1137	1231	1357	1561
Bend overhang $Ü_B$	250	270	300	340	405	440	470	510	575
Height H	330	370	430	510	640	710	770	850	980

Chain length:

$$L_K \approx \frac{L_S}{2} + L_B$$

rounded to pitch 105 mm

Installation height*:

$$H_Z = H + z$$

Pre-tension z ≈ 6 mm/m chain length
*required clear height

Load diagramm

Unsupported length L_f and
travel length L_S without support
depending on the additional load
(see design guidelines).

Load diagram for an intrinsic chain weight q_k of 3.8 kg/m.

If the intrinsic chain weight q_k of 3.8 kg/m is exceeded, the permissible additional load is reduced by the difference.

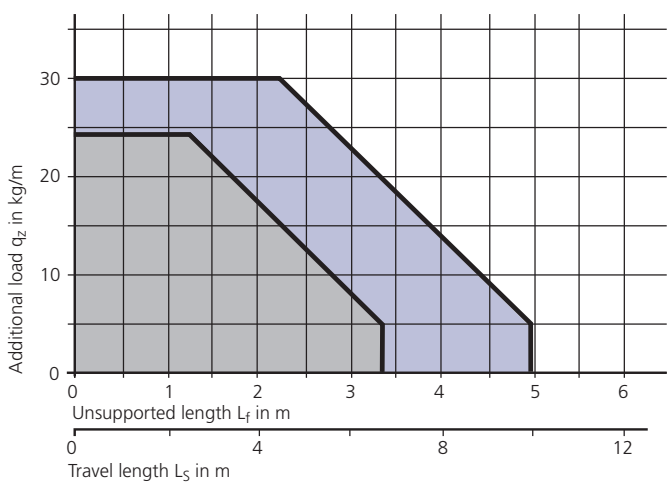

LS 1050 with black special coating

LSX 1050 material **ER 1, ER 1S** and **LS 1050** with galvanized surface

Use our free project planning service.

Subject to change.

Type LS 1050 / LSX 1050

Stay variant RS 2 – with bolted stays

- frame stay RS made of aluminium – standard design
- for lightweight to medium loads
- **Standard stay arrangement:***
  on every 2nd chain link.
  Stays can be fitted on every chain link, please specify when placing your order.
- bolted stays for maximum stability

Chain width:
$B_k = B_i + 16$ mm

$B_{k\ min}$ = 100 mm
$B_{k\ max}$ = 400 mm

Stay width:
$B_{St} = B_i$
$B_{St} = B_k - 16$ mm

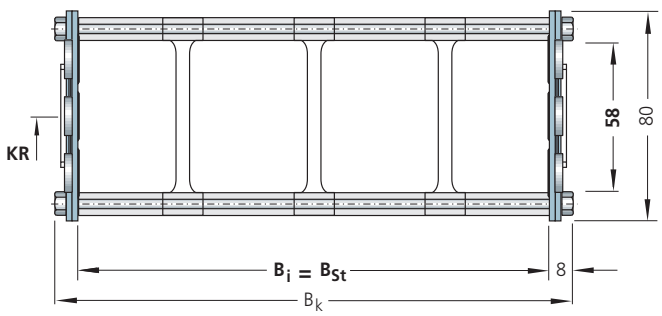

All chain cross sections according to sectional information in the schematic illustration.

Intrinsic chain weight

for two band chains
depending on the chain width.

Weight of the chain bands:
3.4 kg/m (excluding stays)

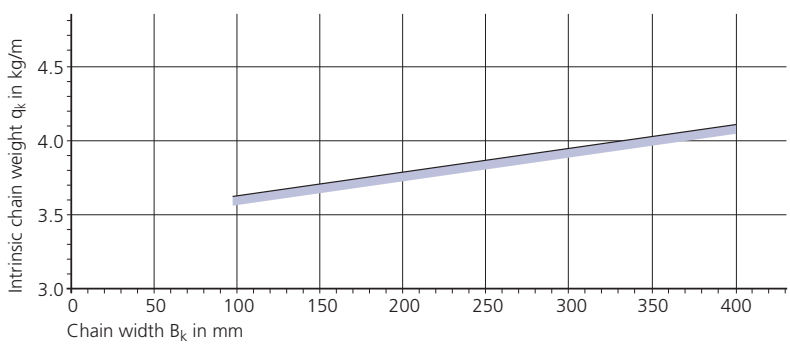

Divider system TS 0 for stay variant RS 2

The dividers are **movable**.

s_T	= 4 mm
$a_{T\ min}$	= 7 mm
$a_{x\ min}$	= 14 mm

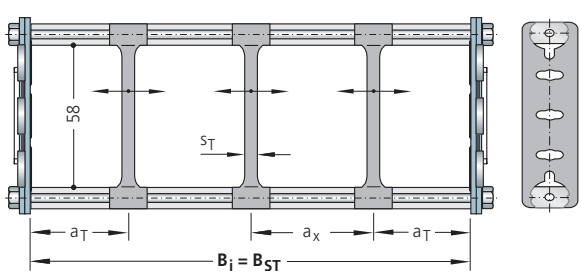

Example for ordering – divider system TS 0

TS 0	/	3
Divider system		Number of dividers n_T

* see also „Design guidelines for central bolts and stay arrangements“ on page 55.

Type LS 1050 / LSX 1050

Stay variant RS 2 – with bolted stays

Divider system TS 1 for stay variant RS 2 with continuous height subdivision

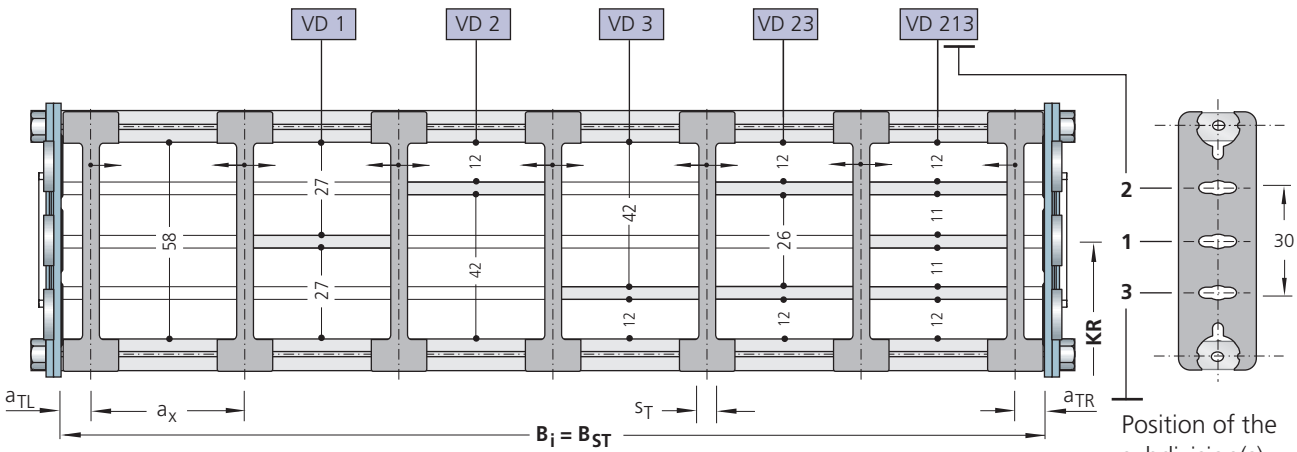

Position of the subdivision(s) in the divider

The dividers are movable. Height subdivision: **Aluminium profile 11 x 4 mm**

s_T	= 4 mm
$a_{T\ min}$	= 7 mm
$a_{T\ max}$	= 25 mm
$a_{x\ min}$	= 14 mm
$n_{T\ min}$	= 2

Example for ordering – divider system TS 1
with continuous height subdivision

TS 1	-	VD 1	/	7
Divider system		Height subdivision variant		Number of dividers n_T

Divider system TS 2 for stay variant RS 2 with grid subdivision (1 mm grid)

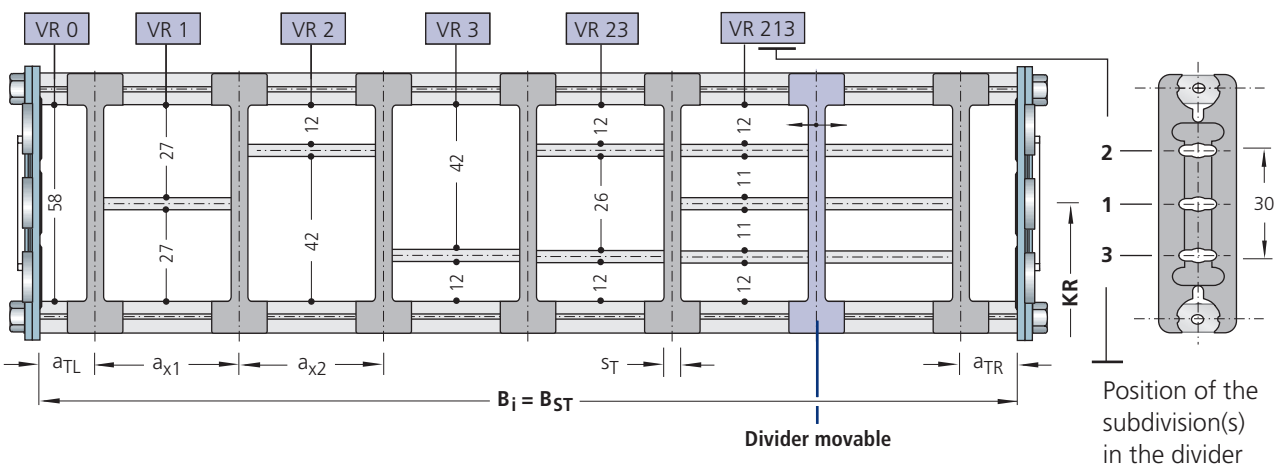

Position of the subdivision(s) in the divider

The dividers are fixed by the height subdivision, the complete divider system is movable.
Optional movable **dividers (s_T = 4 mm)** are available.

Height subdivision: **Aluminium profile 11 x 4 mm**

s_T	= 4 mm
$a_{T\ min}$	= 7 mm
$a_{x\ min}$	= 20 mm (with height subdivision)
$a_{x\ min}$	= 14 mm (for VR 0)
$n_{T\ min}$	= 2

Example for ordering – divider system TS 2
with grid subdivision

TS 2	-	K 1	-	VR 0	/	50
	-	K 2	-	VR 23	/	65
Divider system		Chamber		Variant of the height subdivision in chamber		Installation interval (mm)

Please state the chambers from left to right and the dimensions a_T/a_x when ordering. Possibly enclose a sketch with dimensions.

Use our free project planning service.

Subject to change.

Type LS 1050 / LSX 1050

Stay variant RV – frame stay, reinforced design

- frame stay RV made of aluminium – reinforced design
- for medium to heavy loads and for large chain width
- **Standard stay arrangement:***
  on every 2nd chain link.
  Stays can be fitted on every chain link, please specify when placing your order.
- bolted stays for maximum stability

Chain width:
$B_k = B_i + 16$ mm

$B_{k\ min}$ = 100 mm
$B_{k\ max}$ = 600 mm

Stay width:
$B_{St} = B_i$
$B_{St} = B_k - 16$ mm

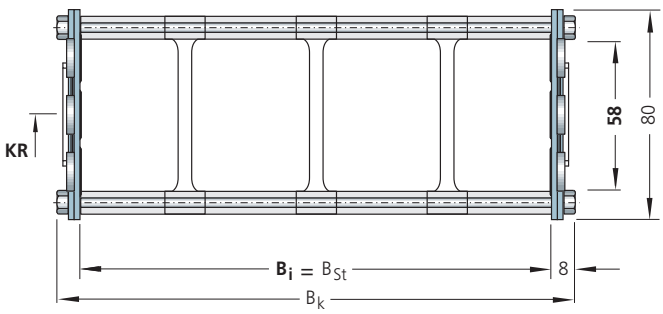

All chain cross sections according to sectional information in the schematic illustration.

Intrinsic chain weight

for two band chains
depending on the chain width.

Weight of the chain bands:
3.4 kg/m (excluding stays)

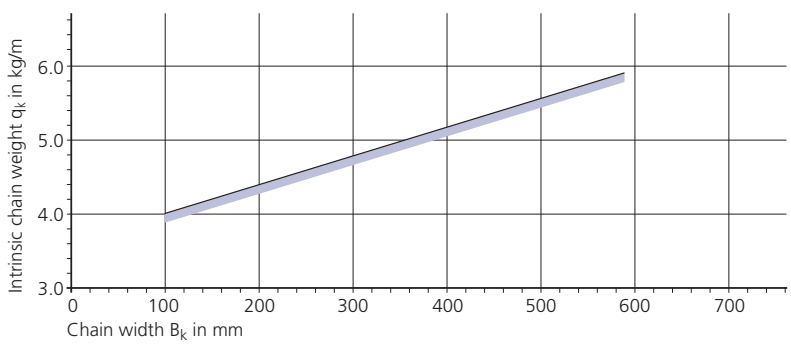

Divider system TS 0 for stay variant RV

The dividers are **movable**.

s_T	= 4 mm
$a_{T\ min}$	= 7 mm
$a_{x\ min}$	= 14 mm

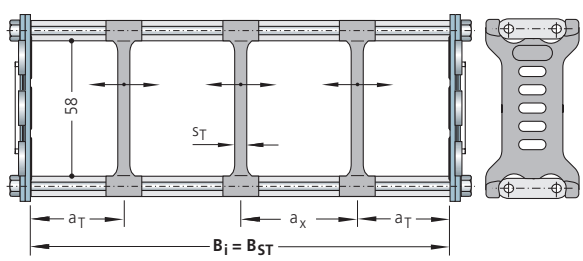

Example for ordering – divider system TS 0

TS 0	/	3
Divider system		Number of dividers n_T

* see also „Design guidelines for central bolts and stay arrangements“ on page 55.

Type LS 1050 / LSX 1050

Stay variant RV – frame stay, reinforced design

Divider system TS 1 for stay variant RV with continuous height subdivision

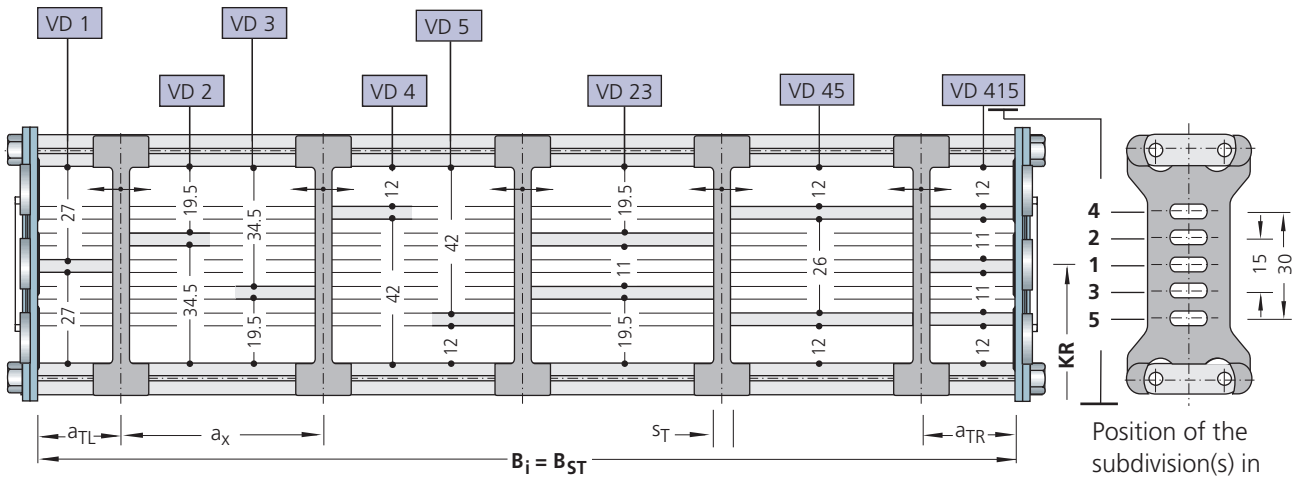

Position of the subdivision(s) in the divider

The dividers are movable. Height subdivision: **Aluminium profile 11 x 4 mm**

s_T	= 4 mm
$a_{T\ min}$	= 7 mm
$a_{T\ max}$	= 25 mm
$a_{x\ min}$	= 14 mm
$n_{T\ min}$	= 2

Example for ordering – divider system TS 1
with continuous height subdivision

TS 1	-	VD 1	/	5
Divider system		Height subdivision variant		Number of dividers n_T

Divider system TS 2 for stay variant RV with grid subdivision (1 mm grid)

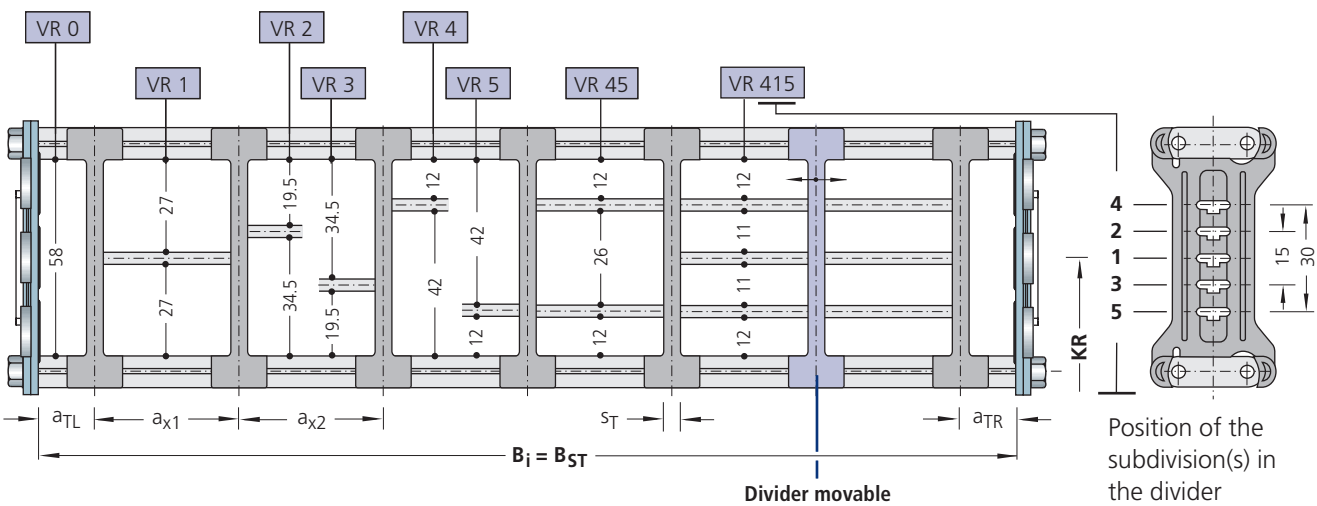

Position of the subdivision(s) in the divider

The dividers are fixed by the height subdivision, the complete divider system is movable.
Optional movable **dividers (s_T = 4 mm)** are available.

Height subdivision: **Aluminium profile 11 x 4 mm**

s_T	= 6 mm
$a_{T\ min}$	= 8 mm
$a_{x\ min}$	= 20 mm (with height subdivision)
$a_{x\ min}$	= 16 mm (for VR 0)
$n_{T\ min}$	= 2

Example for ordering – divider system TS 2
with grid subdivision

TS 2	-	K 1	-	VR 0	/	40
	-	K 2	-	VR 45	/	60
Divider system		Chamber		Variant of the height subdivision in chamber		Installation interval (mm)

Please state the chambers from left to right and the dimensions a_T/a_x when ordering. Possibly enclose a sketch with dimensions.

Use our free project planning service.

Subject to change.

Type LS 1050 / LSX 1050

Stay variant RV – frame stay, reinforced design

Divider system TS 3 for stay variant RV:
Section subdivision with partitions made of plastic or aluminium

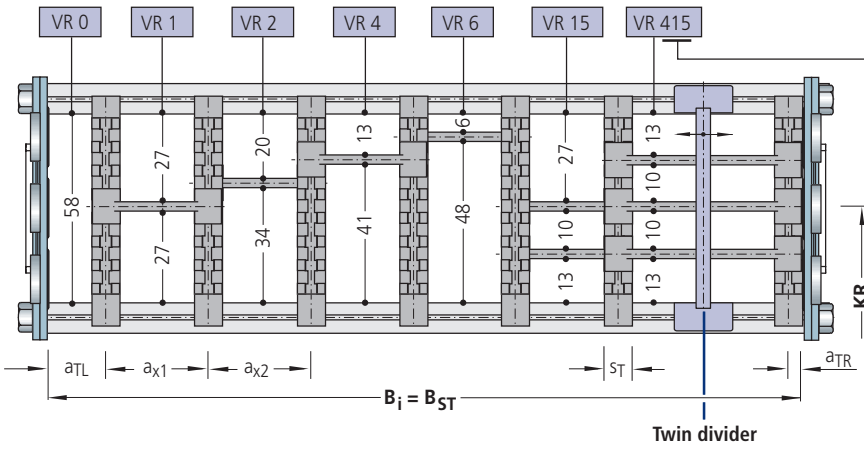

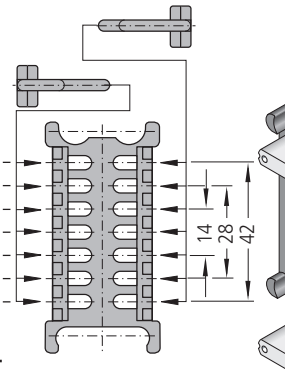

Position of the subdivision(s) in the divider

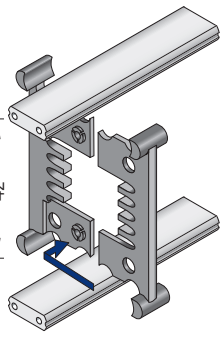

Assembly of twin divider

The dividers are fixed by the partitions, the complete divider system is movable.
Optional movable **twin dividers (s_T = 4 mm)** are available.
Twin dividers can also be assembled at a later date.

s_T	= 8 mm
$a_{T\,min}$	= 4 mm
$a_{x\,min}$	= see partitions dimensions
$n_{T\,min}$	= 2

Example for ordering – divider system TS 3
with partitions made of plastic

TS 3	-	K 1	-	VR 0	/	34
	-	K 2	-	VR 1	/	38
Divider system		Chamber		Variant of the height subdivision in chamber		Installation interval (mm)

Please state the chambers from left to right and the dimensions a_T/a_x when ordering. Possibly enclose a sketch with dimensions.

Please state additional twin dividers when ordering.

Dimensions of the partitions for TS 3

Partitions made of plastic (Standard)

Dimensions in mm

a_x (Center to center distance, dividers)									
16	18	23	28	32	33	38	43	48	58
64	68	78	80	88	96	112	**128**	**144**	**160**
176	**192**	**208**							

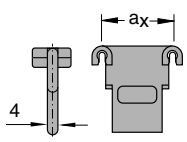

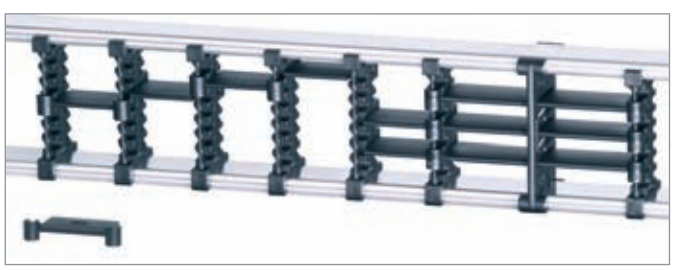

When using **partitions with a_x > 112 mm**, there must be an additional central support with a **twin divider**. Twin dividers are suitable for subsequent installation in the partition system.

Alternatively, partitions made of aluminium in 1 mm section widths **($a_{x\,min}$ = 42 mm)** are also available.

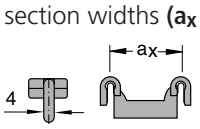

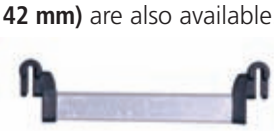

Type LS 1050 / LSX 1050

Stay variant RV – frame stay, reinforced design

Divider system TS 4 for stay variant RV:
Half dividers and continuous height subdivision

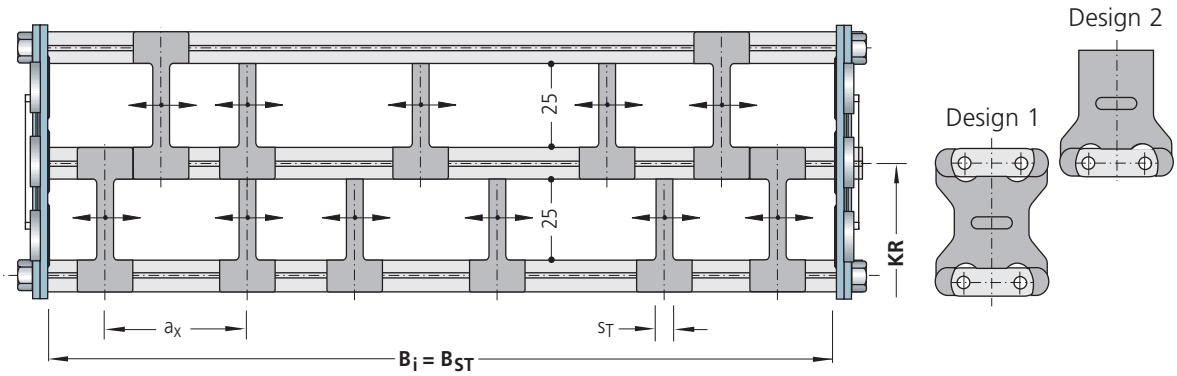

The half dividers are movable. Height subdivision: **Aluminium profile 27 x 8 mm**.
At least 2 half dividers with wrap-around on both sides (design 1)
must be installed in the top and bottom chambers in the vicinity of the chain band.

s_T	= 4 mm
$a_{x\ min}$	= 15 mm

Ordering – divider system TS 4
with half dividers and continuous height subdivision

Please enclose a sketch with dimensions.
Please state the a_T /a_X working clearances.

Use our free project planning service.

Subject to change.

Type LS 1050 / LSX 1050

Stay variant RMA – mounting frame stay

- for very large cable diameters such as with air hoses
- cables with diameters greater than the clearance height of the chain links can be routed
- installed on the inside or outside in the bend radius according to preference
- **Standard stay arrangement:***
  on every 2nd chain link.
  Stays can be fitted on every chain link, please specify when placing your order.
- bolted stays for maximum stability

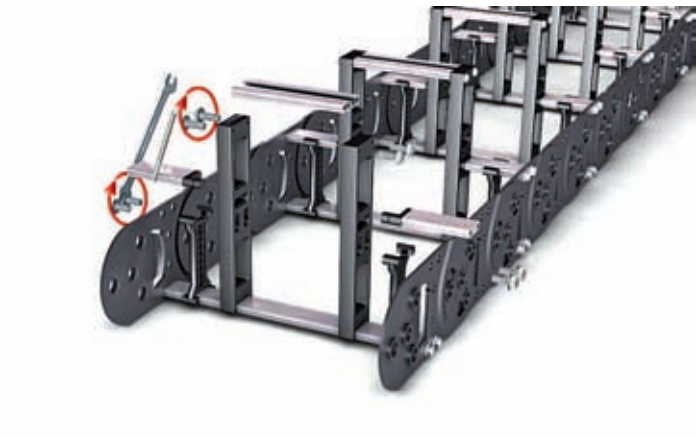

Chain width:

$B_k = B_i + 16$ mm

$B_{k\,min}$ = 200 mm
$B_{k\,max}$ = 400 mm
$B_{i1\,min}$ = 35 mm
$B_{i2\,min}$ = 84 mm
$B_{i3\,min}$ = 35 mm
s_{TA} = 15 mm

Stay width:

$B_{St} = B_i$

$B_{St} = B_k - 16$ mm

Available passage heights

H_i = 130, 160, 200 mm

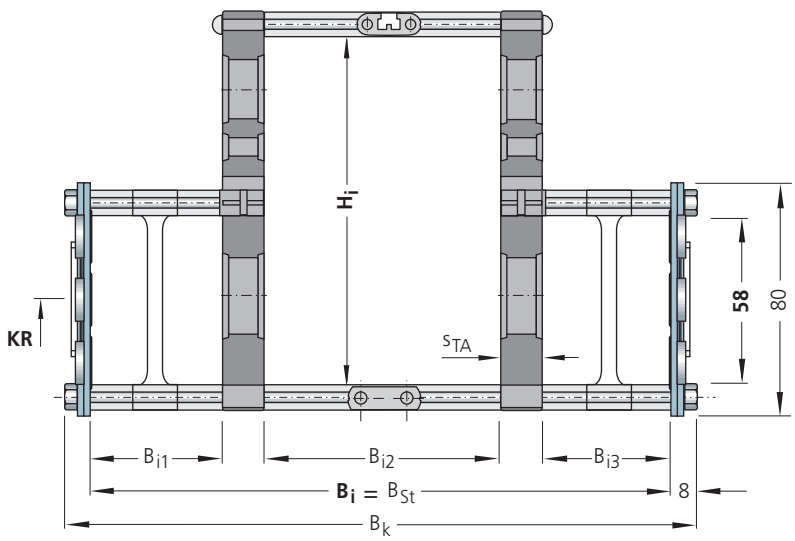

All chain cross sections according to sectional information in the schematic illustration.

On account of the design parameters to be observed, we ask you to contact our technical consultants.

Assembly on the inside – observe minimum bend radius (half-stayed arrangement):
H_i = 130 mm: KR_{min} = 195 mm
H_i = 160 mm: KR_{min} = 260 mm
H_i = 200 mm: KR_{min} = 260 mm

Minimum bend radius full-stayed – please ask us about it.

The cable carrier must be supported on the chain band and not on the stays.

Intrinsic chain weight

for two band chains
depending on the chain width.

Weight of the chain bands:
3.4 kg/m (excluding stays)

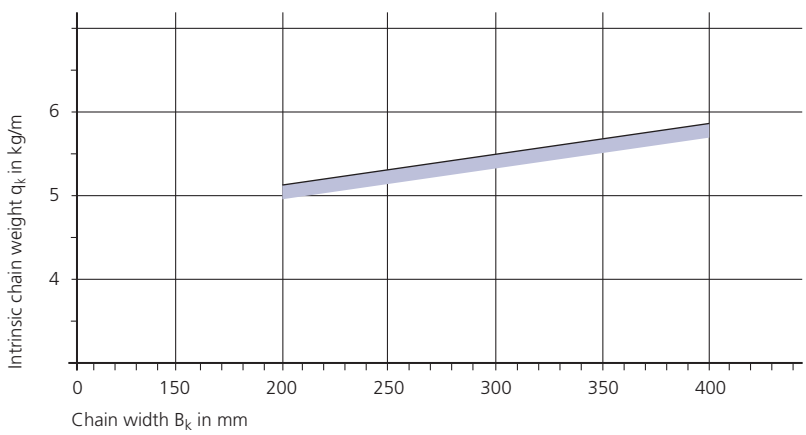

* see also „Design guidelines for central bolts and stay arrangements“ on page 55.

Type LS 1050 / LSX 1050

Stay variant RR – frame stay, tube design

- gentle cable support due to rotating metal tubes
- ideal when using media hoses with "soft" sheaths
- possible materials of the axles, tubes and dividers:
  - axles, tubes and dividers made of galvanized steel **(standard)**
  - axles, tubes and dividers made of stainless steel ER 1
- **Standard stay arrangement:***
  on every 2nd chain link.
  Stays can be fitted on every chain link, please specify when placing your order.
- bolted stays for maximum stability

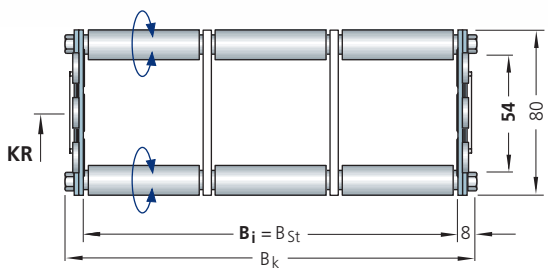

All chain cross sections according to sectional information in the schematic illustration.

Chain width:
$B_k = B_i + 16$ mm

$B_{k\ min}$ = 100 mm
$B_{k\ max}$ = 500 mm

Stay width:
$B_{St} = B_i$
$B_{St} = B_k - 16$ mm

Intrinsic chain weight

for two band chains
depending on the chain width.

Weight of the chain bands:
3.4 kg/m (excluding stays)

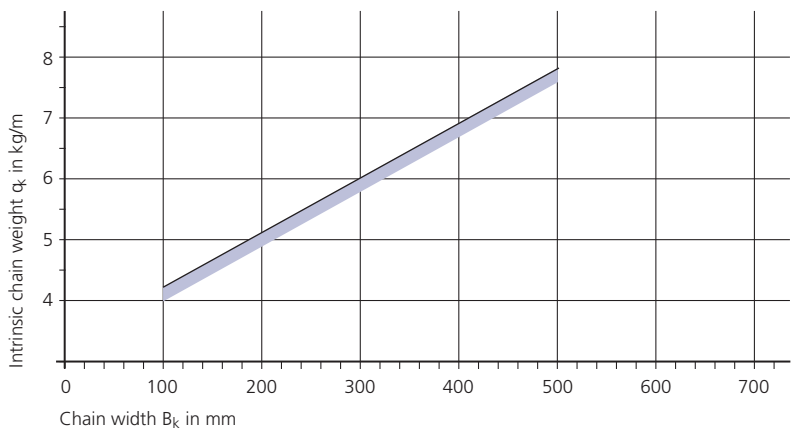

Divider systems TS 0 and TS 1 for stay variant RR

The dividers are **fixed**.

s_T	= 4 mm
$a_{T\ min}$	= 20 mm
$a_{T\ max}$	= 25 mm
$a_{x\ min}$	= 20 mm
$n_{T\ min}$	= 2 (for TS 1)

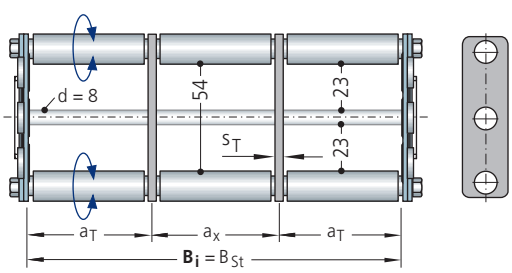

Example for ordering – divider system

TS 0	/	2
Divider system		Number of dividers n_T

Please state the a_T/a_x working clearances when ordering. Possibly enclose a sketch with dimensions.

* see also „Design guidelines for central bolts and stay arrangements" on page 55.

Use our free project planning service.

Subject to change.

Type LS 1050 / LSX 1050

Stay variant LG – hole stay made of aluminium, split design

- optimum cable guidance in the neutral bending line is possible
- drilling pattern individually adapted to the application
- high stability due to solid construction
- split design as standard for easy laying of the cables
- **Standard stay arrangement:***
  on every 2nd chain link.
  Stays can be fitted on every chain link, please specify when placing your order.
- bolted stays for maximum stability – also available not split

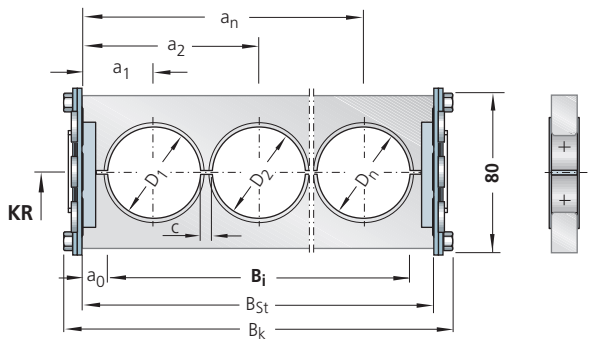

All chain cross sections according to sectional information in the schematic illustration.

Chain width:

$B_k = \Sigma D + \Sigma c + 46$ mm

$B_{k\,min}$ = 100 mm
$B_{k\,max}$ = 600 mm

Stay width:

$B_{St} = \Sigma D + \Sigma c + 28$ mm

$B_i = B_{St} - 2\,a_0$

$B_{St} = B_k - 18$ mm

D_{max} = 48 mm
c_{min} = 4 mm
$a_{0\,min}$ = 14 mm

Intrinsic chain weight

for two band chains
depending on the chain width.

Hole area of the hole stay is approx. 50 %

Weight of the chain bands:
3.4 kg/m (excluding stays)

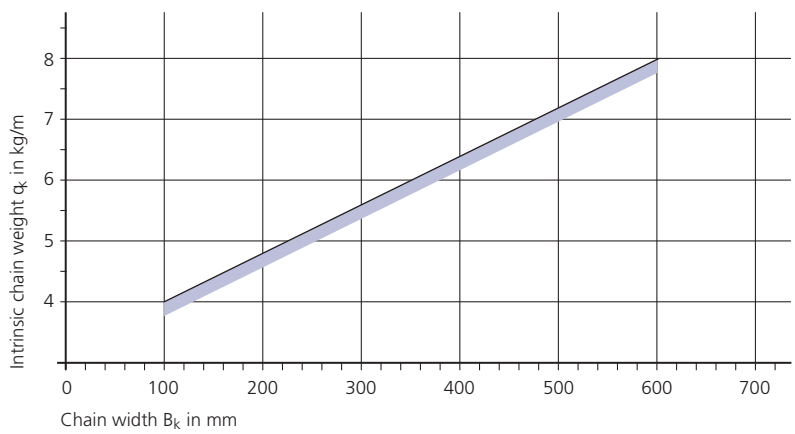

* see also „Design guidelines for central bolts and stay arrangements“ on page 55.

Type LS 1050 / LSX 1050

Fixed point connection

Connection variant FA

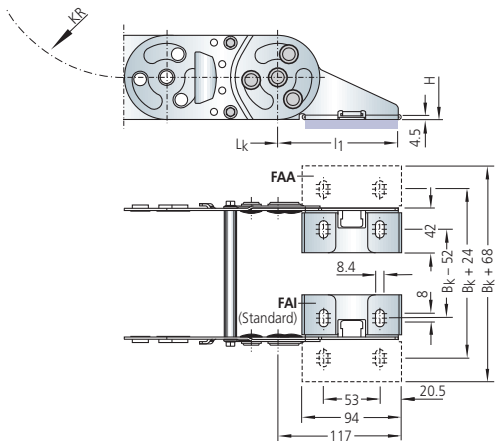

Driver connection

Connection variant MA

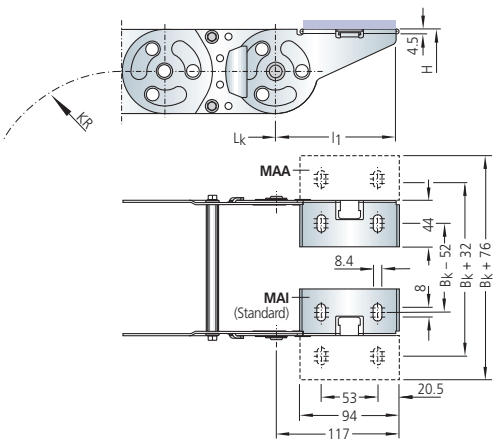

Connection variant MI

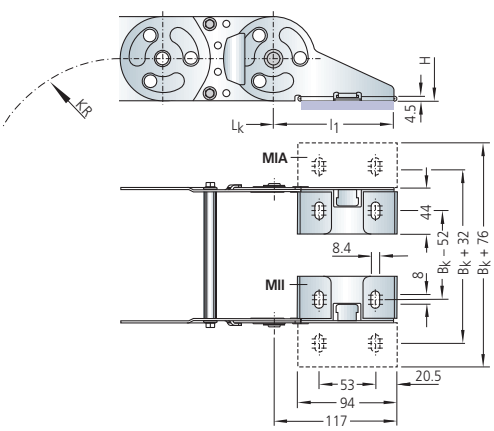

Different connection variants for fixed point and driver are possible according to the drawing information. Different end connectors are needed for different connection variants.

Please state the desired connection variant according to the ordering key (see page 69).

Strain relief devices

The C-Rails are fixed together with the end connectors and thus do not have to be bolted separately.

Length of the C-Rail L_P:	
Fixed point:	$L_P = B_i$
Driver:	$L_P = B_i + 4$ mm

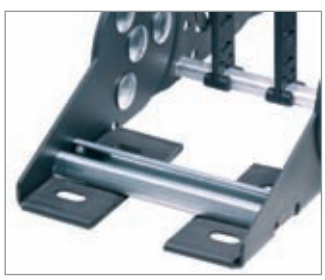

■ C-Rail fixed in the end connector.

Dimensions C-Rail

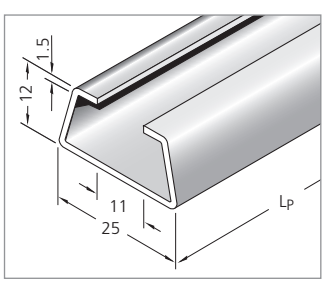

Integratable C-Rail
suitable for all commercially available brackets
(slot width 11 – 12 mm).

Material	**Item-No.**
Steel	3934

■ Inserting the C-Rail in the end connector.

Use our free project planning service.

Subject to change.

Type LS 1050 / LSX 1050

Ordering – cable carrier

Cable carrier

LS 1050	.	180	-	RS 2	-	125	-	Sb	-	2415
Type		Stay width B_{St} in mm		Stay variant		Bend radius KR in mm		Chain band material		Chain length L_k in mm (without connection)

Chain band materials:
Sb = specially coated steel
ER 1 = stainless steel
ER 1S = sea water resistant stainless steel

More information:
See material overview on page 50.

Ordering – divider system

Divider system

TS 0	/	4
Divider system		Number of dividers n_T

See also the sample order for the respective divider system.

Ordering – connection

Connection

F	A	A	/	M	I	A
Fixed point	Connection type	Connection surface		Driver	Connection type	Connection surface

If no order designation for the connection is stated, we supply the connection variant **FAI/MAI (Standard)**.

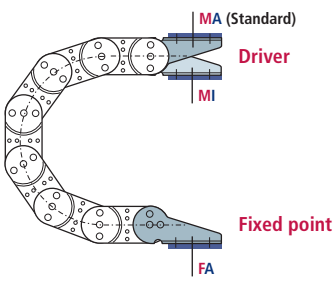

F – Fixed point
M – Driver

Connection type
A – Bolts facing outward **(Standard)**
I – Bolts facing inward

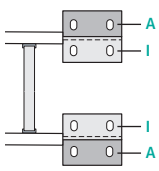

Connection surface
I – Connector surface inside (< B_k)
A – Connector surface outside (> B_k)

Guide channels
➤ from page 160

Strain relief devices
➤ from page 167

Cables for cable carrier systems
➤ in our LIFE-LINE Safety Cables catalogue.

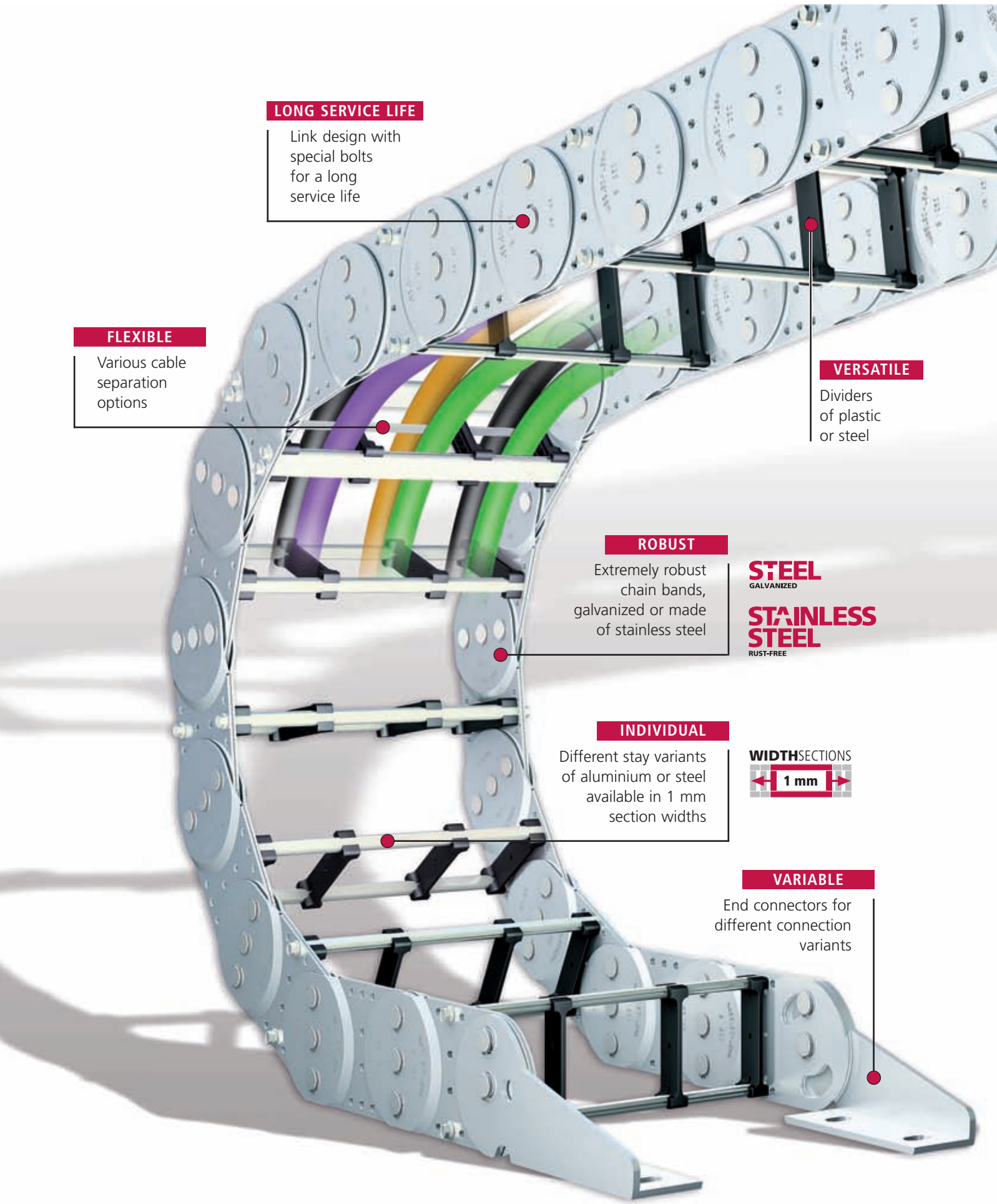

Use our free project planning service.

Subject to change.

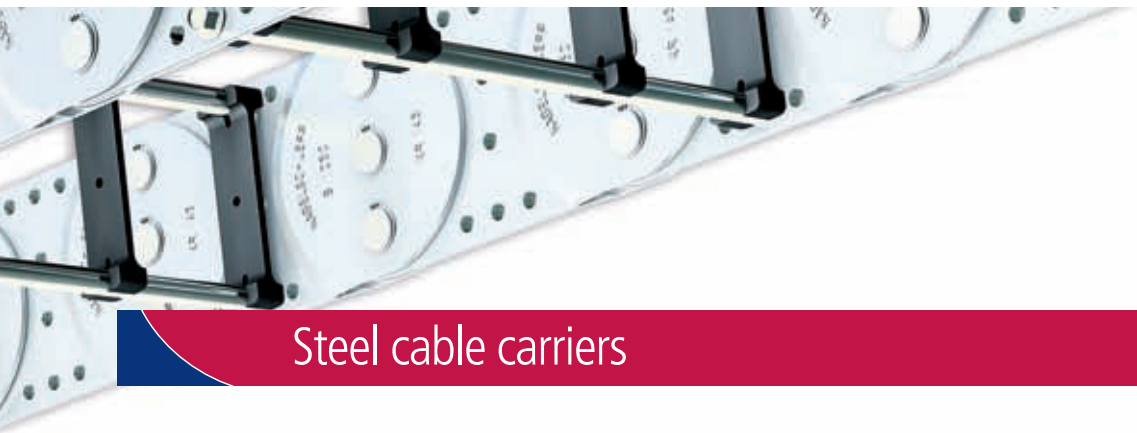

Steel cable carriers

S Series

Chain bands made of galvanized steel

STEEL GALVANIZED

SX Series

Chain bands made of rust and acid resistant steel

STAINLESS STEEL RUST-FREE

Extremely robust and stable steel chains – for heavy mechanical loads and harsh environmental conditions

Cable carriers tried and tested for many years with chain bands made of steel or stainless steel.

This makes the S/SX series very stable and robust:

- **very stable chain link plates which each consist of two single plates.**
- **link design with multiple stroke system and special bolts**
- **bolted stay system, solid end connectors**

WIDTHSECTIONS 1 mm

Further details about chain design can be found on page 22.

Large unsupported lengths and **high possible additional loads** are possible due to the extremely stable design. The link design with special bolts also makes simple shortening or lengthening of the chain possible. The installation of sectional parts on the construction site is also possible easily and quickly. The individual chain sections are connected together with the link bolts.

Covering the cable carrier with an aluminium cover system or steel band cover is possible for protecting the cables against hot chips or severe contamination.

Many stay variants with different stay cross sections and stay materials make possible an individual adaptation of the chain to the application and optimum laying of the cables and hoses.

Overview of dimensions

Type	Height h_i	Chain width $B_{k\ min}$	Chain width $B_{k\ max}$	Pitch t	Page
S/SX 0650	31	70	500	65	73
S/SX 0950	46	125	600	95	85
S/SX 1250	72	130	800	125	97
S/SX 1800	108	180	1000	180	115
S/SX 2500	183	250	1200	250	125
S/SX 3200	220	250	1500	320	131

Dimensions are dependent on the stay variant. Multi-band chains are possible for larger widths.
See page 137 for values for types S/SX 5000-7000.

Use our free project planning service.

Subject to change.

Type **S 0650**

Steel chain bands

Type **SX 0650**

Stainless steel chain bands

2D/3D-Data
www.kabelschlepp.de/cad

Materials

Chain bands and end connectors:
S 0650: Steel, zinc-plated
SX 0650: grade rust and acid resistant **steel**

STEEL GALVANIZED
STAINLESS STEEL RUST-FREE

Standard stay material: aluminium alloy*
Dividers and end pieces: plastic
➔ see material properties, page 50

Chain width

customer-specific
available in 1 mm width sections

WIDTHSECTIONS 1 mm

Chain pitch

65 mm

Bend radii

various **standard bend radii**
from 75 – 400 mm; intermediate radii upon request

* See description for the respective stay variant for details.

Stay variant RS

Clearance height h_i = **31 mm**
➤ **from page 75**

Stay variant RMA

Clearance height $h_{i\,max}$ = **200 mm**
➤ **from page 77**

Stay variant RR

Clearance height h_i = **26 mm**
➤ **from page 78**

Stay variant LG

max. **hole Ø = 40 mm**
➤ **from page 79**

Stay variant RMD

Clearance height h_i = **30 mm**
➤ **from page 80**

Type S 0650 / SX 0650

Rolling schematic illustration unsupported arrangement

Chain pitch t = 65 mm

Height h_G = 50 mm

Connection height H = 2 KR + 75 mm

Connection length l_1 = 95/25 mm
(see connection dimensions)

A flat and level surface is required for the cable carrier to extend and retract reliably. Under certain conditions, a support tray needs to be installed (see page 163).

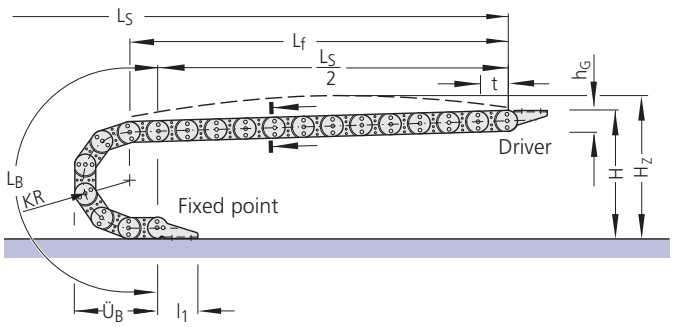

Variable sizes

depending on the bend radius

Dimensions in mm

Bend radius	75	95	115	125	135	145	155	175	200	250	300	400
Bend length L_B	496	558	621	653	684	716	747	810	888	1045	1202	1516
Bend overhang $Ü_B$	230	250	270	280	290	300	310	330	355	405	455	555
Height H	225	265	305	325	345	365	385	425	475	575	675	875

Chain length:

$$L_k \approx \frac{L_S}{2} + L_B$$

rounded to pitch 65 mm

Installation height*:

$$H_Z = H + z$$

Pre-tension z ≈ 10 mm/m chain length
*required clear height

Load diagramm

Unsupported length L_f and
travel length L_S without support
depending on the additional load
(see design guidelines).

Load diagram for an intrinsic chain weight q_k of 4.5 kg/m.

If the intrinsic chain weight q_k of 4.5 kg/m is exceeded, the permissible additional load is reduced by the difference.

For circular operations, combinations of KR/RKR are possible.
Please contact us for details.

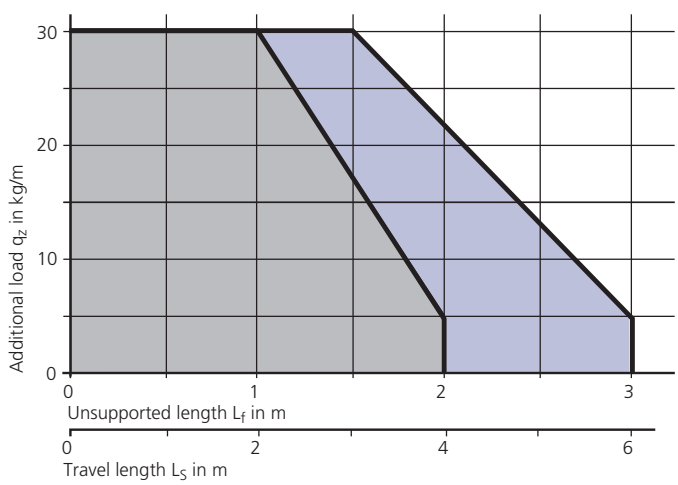

- **S 0650** material **galvanized steel**
- **SX 0650** material **ER 2**
- **SX 0650** material **ER 1 / ER 1S**

Use our free project planning service.

Subject to change.

Type S 0650 / SX 0650

Stay variant RS 2 – with bolted stays

- frame stay RS made of aluminium – standard design
- for lightweight to medium loads
- **Standard stay arrangement:** on every 2nd chain link. Stays can be fitted on every chain link, please specify when placing your order.
- bolted stays for maximum stability

Chain width:
$B_k = B_i + 31$ mm

$B_{k\ min}$ = 100 mm
$B_{k\ max}$ = 400 mm

Stay width:
$B_{St} = B_i + 16$ mm
$B_{St} = B_k - 15$ mm

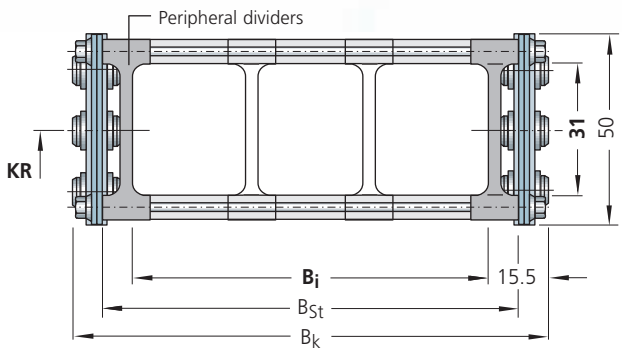

All chain cross sections according to sectional information in the schematic illustration.
The peripheral dividers are an integral part of the stay system and must not be ordered separately.

Intrinsic chain weight

for two band chains
depending on the chain width.

Weight of the chain bands:
3.6 kg/m (excluding stays)

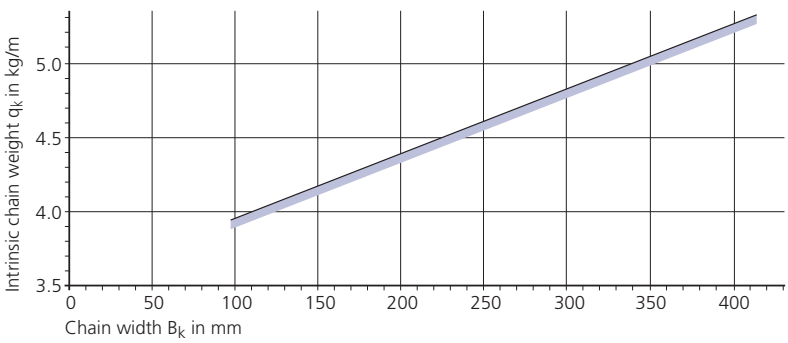

Divider system TS 0 for stay variant RS 2

The dividers are **movable**.

s_T	= 3 mm
$a_{T\ min}$	= 11.5 mm
$a_{x\ min}$	= 13 mm

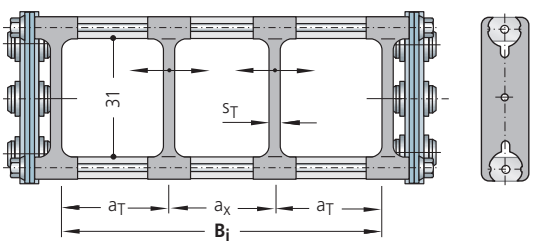

Example for ordering – divider system TS 0

TS 0	/	2
Divider system		Number of dividers n_T

Type S 0650 / SX 0650

Stay variant RS 1 – with a detachable stay

- frame stay RS made of aluminium – solid design
- for lightweight to medium loads
- **Standard opening options:**
  Outside: The cable carrier can be opened quickly and easily simply by rotating the stays through 90°.
  Inside: Screwed stays

  Optional: Bolted on the outside and opening inwards, please state when ordering.
- **Standard stay arrangement:**
  on every 2nd chain link.
  Stays can be fitted on every chain link, please specify when placing your order.

Chain width:
$B_k = B_i + 35$ mm

$B_{k\ min}$ = 100 mm
$B_{k\ max}$ = 300 mm

Stay width:
$B_{St} = B_i + 20$ mm
$B_{St} = B_k - 15$ mm

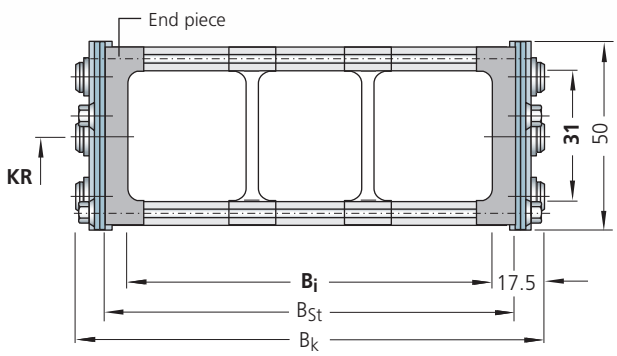

All chain cross sections according to sectional information in the schematic illustration.
The end pieces are an integral part of the stay system and must not be ordered separately.

Intrinsic chain weight

for two band chains
depending on the chain width.

Weight of the chain bands:
3.6 kg/m (excluding stays)

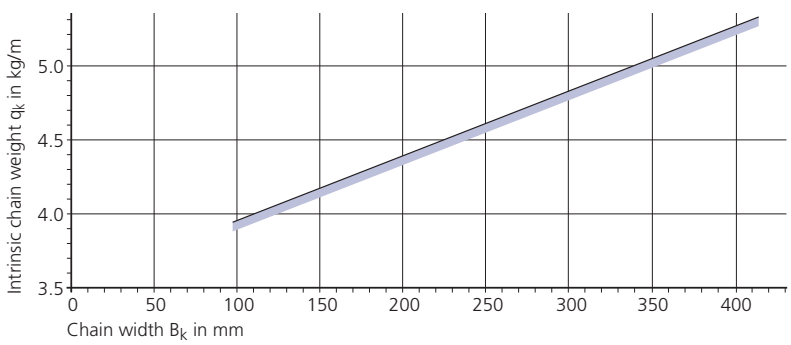

Divider system TS 0 for stay variant RS 1

The dividers are **movable**.

s_T	= 3 mm
$a_{T\ min}$	= 11.5 mm
$a_{x\ min}$	= 13 mm

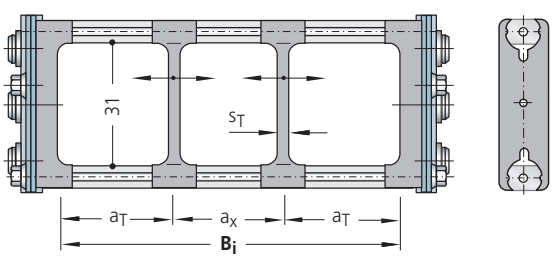

Example for ordering – divider system TS 0

TS 0	/	2
Divider system		Number of dividers n_T

Use our free project planning service.

Subject to change.

Type S 0650 / SX 0650

Stay variant RMA – mounting frame stay

- for very large cable diameters such as with air hoses.
- cables with diameters greater than the clearance height of the chain links can be routed
- installed on the inside or outside in the bend radius according to preference
- **Standard stay arrangement:** on every 2nd chain link. Stays can be fitted on every chain link, please specify when placing your order.
- bolted stays for maximum stability

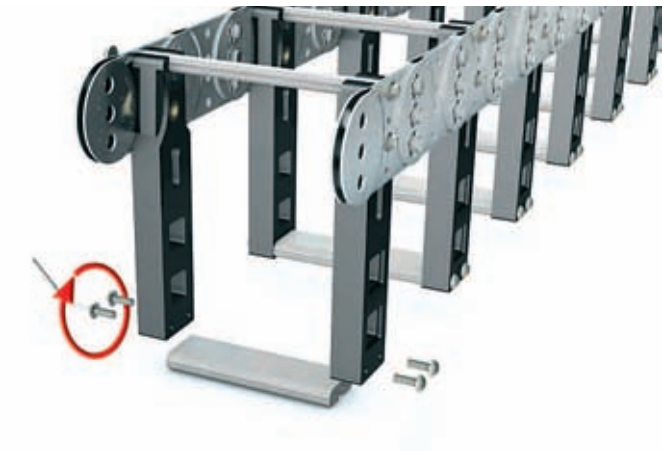

Chain width:
$B_k = B_i + 45$ mm

$B_{k\,min}$ = 200 mm
$B_{k\,max}$ = 400 mm

Stay width:
$B_{St} = B_i + 30$ mm
$B_{St} = B_k - 15$ mm

Available passage heights:
H_i = 130, 160, 200 mm

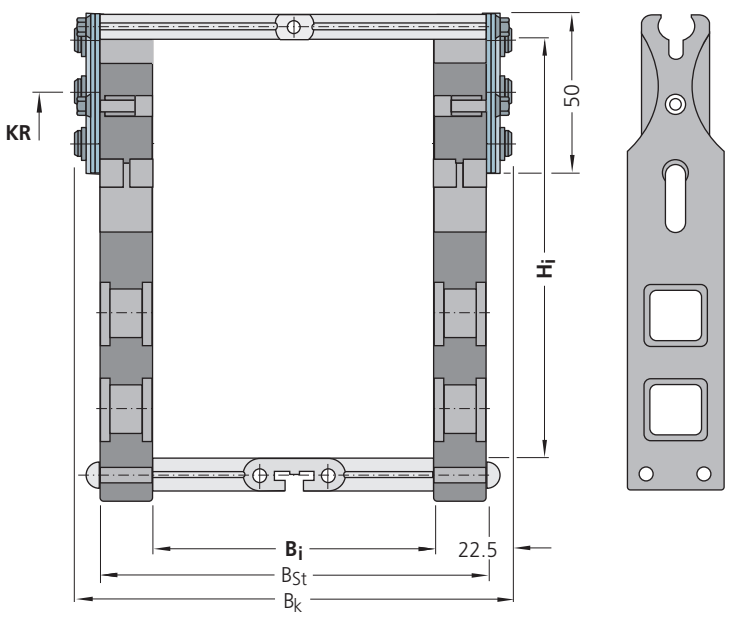

Assembly on the inside – observe minimum bend radius (half-stayed arrangement):
H_i = 130 mm: KR_{min} = 175 mm
H_i = 160 mm: KR_{min} = 220 mm
H_i = 200 mm: KR_{min} = 300 mm

Minimum bend radius full-stayed – please ask us about it.

The cable carrier must be supported on the chain band and not on the stays.

All chain cross sections according to the section information in the schematic illustration.

On account of the design parameters to be observed, we ask you to contact our technical consultants.

Intrinsic chain weight

for two band chains
depending on the chain width.

Weight of the chain bands:
3.6 kg/m (excluding stays)

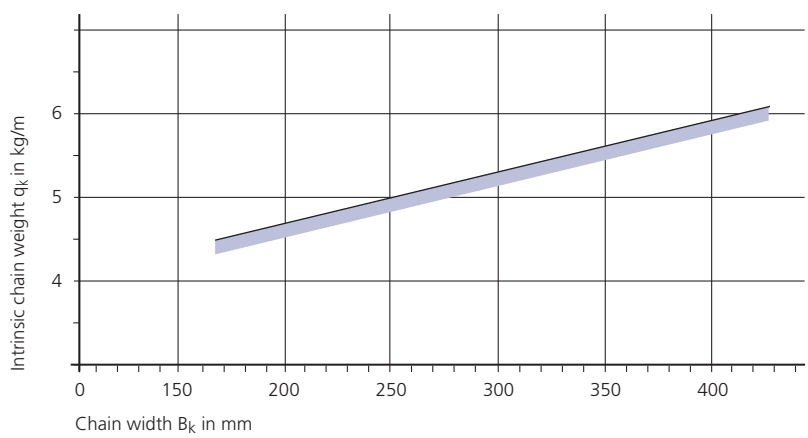

Type S 0650 / SX 0650

Stay variant RR – frame stay, tube design

- gentle cable support due to rotating metal tubes
- ideal when using media hoses with "soft" sheaths
- possible materials of the axles, tubes and dividers:
  - axles and tubes, galvanized steel with plastic dividers (**standard**)
  - axles, tubes and dividers made of galvanized steel
  - axles, tubes and dividers made of stainless steel ER 1, ER 1S
- **Standard stay arrangement:** on every 2nd chain link. Stays can be fitted on every chain link, please specify when placing your order.
- bolted stays for maximum stability

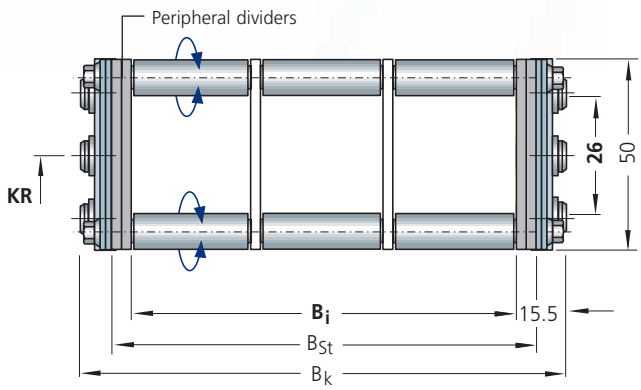

Chain width:
$B_k = B_i + 31$ mm

$B_{k\ min}$ = 100 mm
$B_{k\ max}$ = 400 mm

Stay width:
$B_{St} = B_i + 16$ mm
$B_{St} = B_k - 15$ mm

All chain cross sections according to sectional information in the schematic illustration.
The peripheral dividers are an integral part of the stay system and must not be ordered separately.

Intrinsic chain weight

for two band chains
depending on the chain width.

Weight of the chain bands:
3.6 kg/m (excluding stays)

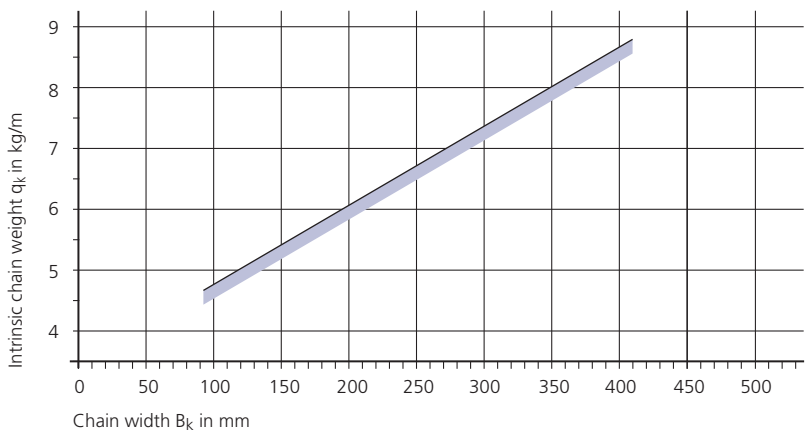

Divider systems TS 0 and TS 1 for stay variant RR

The dividers are **fixed**.

TS 0: without height subdivision
TS 1: with continuous centric height subdivision

s_T	= 4 mm
$a_{T\ min}$	= 20 mm
$a_{x\ min}$	= 25 mm

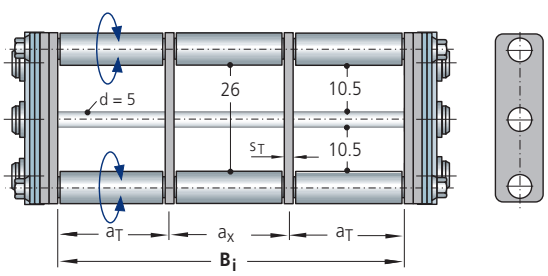

Example for ordering – divider system

TS 0	/	2
Divider system		Number of dividers n_T

Please state the dimensions a_T/a_x when ordering. Possibly enclose a sketch with dimensions.

Use our free project planning service.

Subject to change.

Type S 0650 / SX 0650

Stay variant LG – hole stay made of aluminium, split design

- optimum cable guidance in the neutral bending line is possible
- drilling pattern individually adapted to the application
- high stability due to solid construction
- split design as standard for easy laying of the cables
- **Standard stay arrangement:** on every 2nd chain link. Stays can be fitted on every chain link, please specify when placing your order.
- bolted stays for maximum stability – also available not split

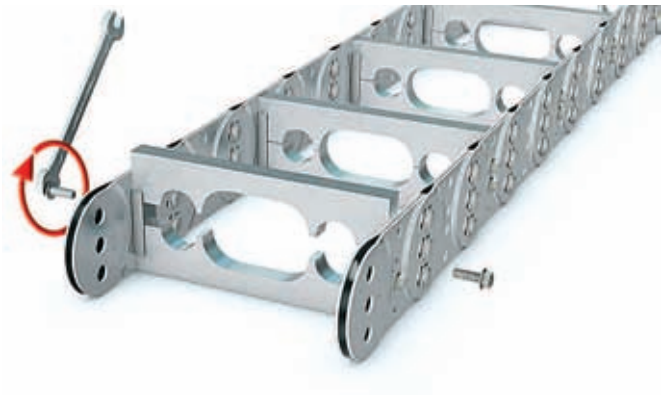

Chain width:

$B_k = \Sigma D + \Sigma c + 35$ mm

$B_{k\,min}$ = 70 mm
$B_{k\,max}$ = 500 mm

Stay width:

$B_{St} = \Sigma D + \Sigma c + 18$ mm

$B_i = B_{St} - 2\,a_0$

$B_{St} = B_k - 17$ mm

D_{max} = 40 mm
c_{min} = 4 mm
$a_{0\,min}$ = 9 mm

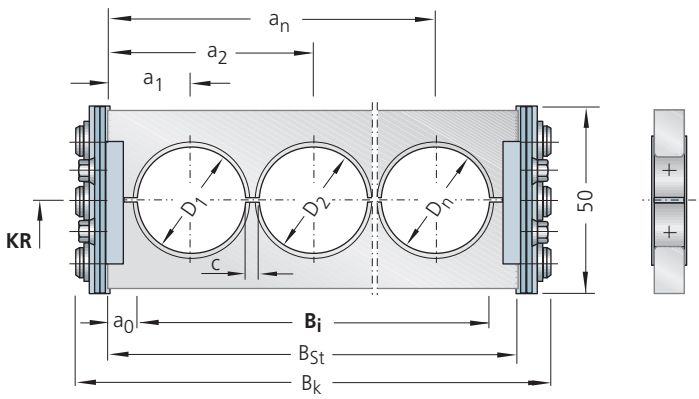

All chain cross sections according to sectional information in the schematic illustration.

Intrinsic chain weight

for two band chains
depending on the chain width.

Hole area of the hole stay is approx. 50 %

Weight of the chain bands:
3.6 kg/m (excluding stays)

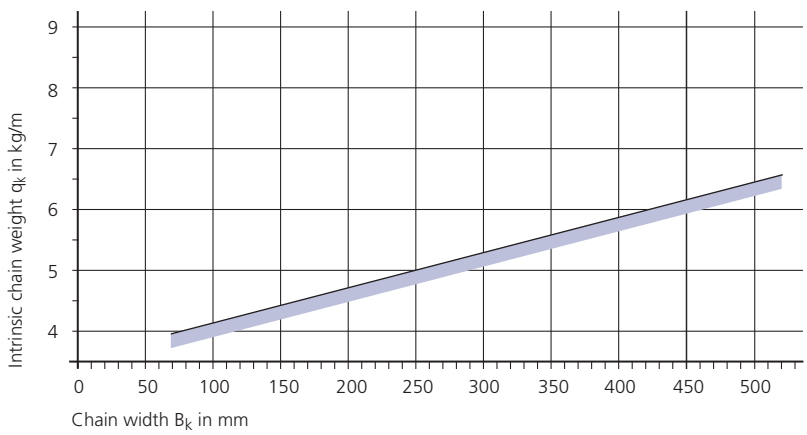

Type S 0650 / SX 0650

Stay variant RMD – covered cable carrier, STEEL-TUBE

- **aluminium cover system** for protecting the cables and hoses
- for applications where chips or severe contamination occur
- bolted aluminium cover for maximum stability

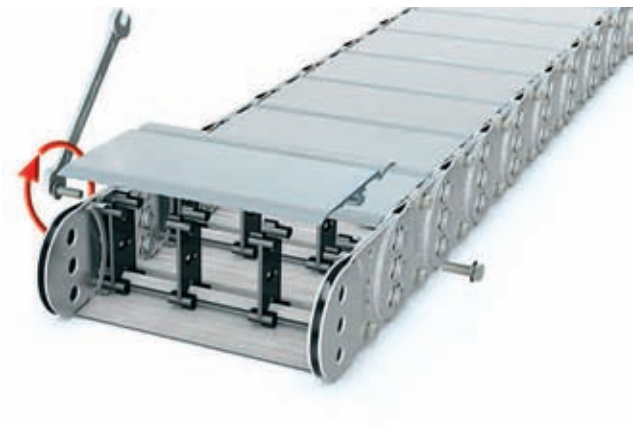

Steel band covers are also available as light-weight, economically priced alternatives to covering with the aluminium cover system, see page 166.

Chain width:
$B_k = B_i + 35$ mm

$B_{k\ min}$ = 100 mm
$B_{k\ max}$ = 500 mm

Stay width:
$B_{St} = B_i + 20$ mm
$B_{St} = B_k - 15$ mm

Minimum bend radius
KR_{min} = 115 mm

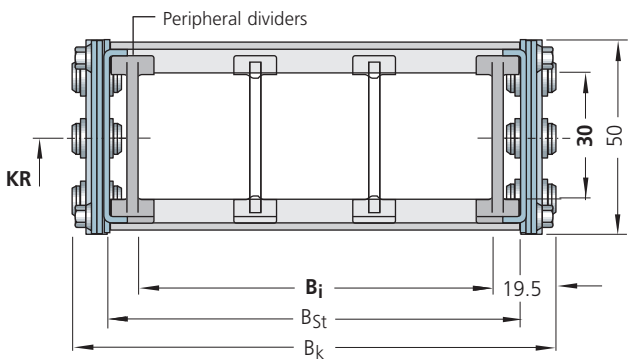

All chain cross sections according to sectional information in the schematic illustration.
The peripheral dividers are an integral part of the stay system and must not be ordered separately.

Intrinsic chain weight

for two band chains
depending on the chain width.

Weight of the chain bands:
3.6 kg/m (excluding stays)

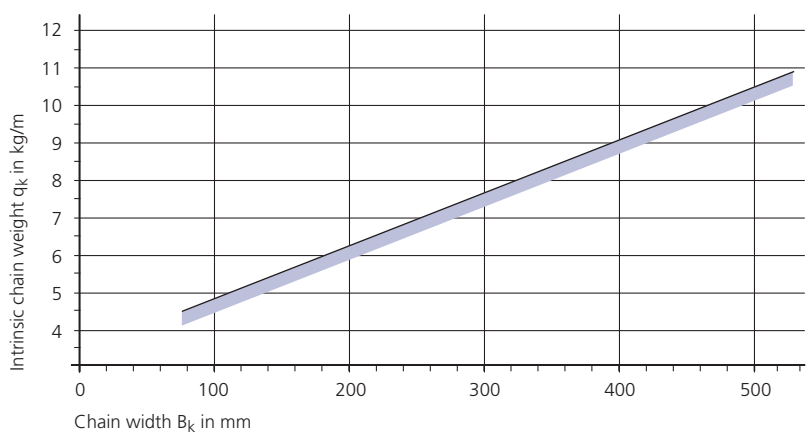

Use our free project planning service.

Subject to change.

Type S 0650 / SX 0650

Stay variant RMD – covered cable carrier, STEEL-TUBE

Divider systems TS 0 and TS 1 for stay variant RMD

The dividers are **movable**.

TS 0: without height subdivision
TS 1: with continuous centric height subdivision

s_T	= 3 mm
$a_{T\ min}$	= 11.5 mm
$a_{x\ min}$	= 13 mm

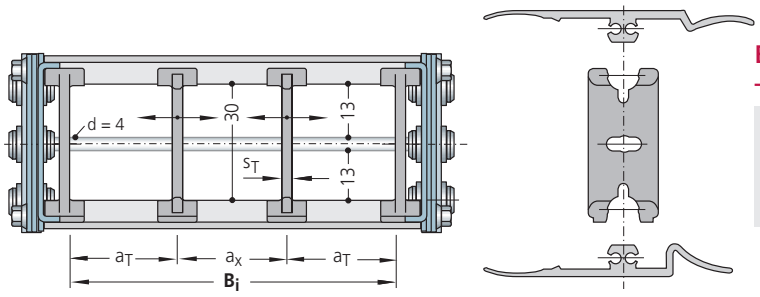

Example for ordering – divider system

TS 0	/	2
Divider system		Number of dividers n_T

Type S 0650 / SX 0650

Fixed point connection

Connection variant FA

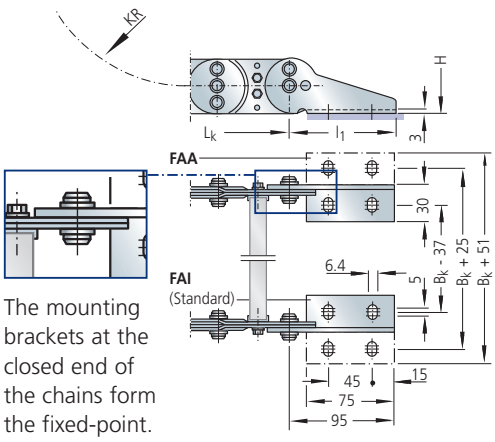

The mounting brackets at the closed end of the chains form the fixed-point.

Connection variant FI

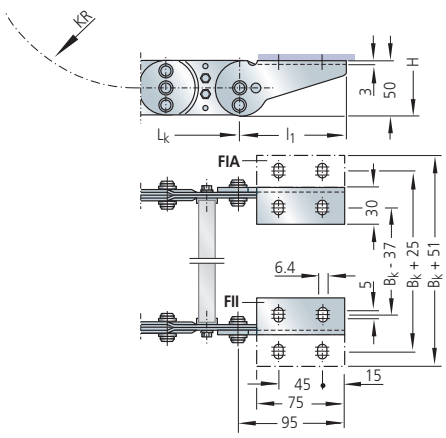

Connection variant FH

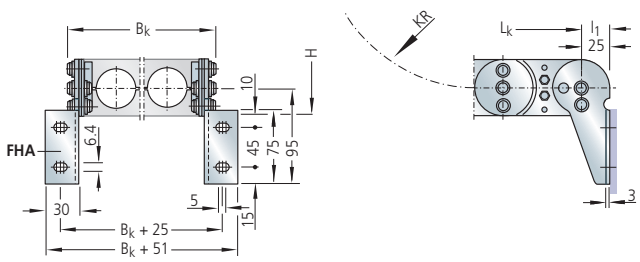

Connection variant FK

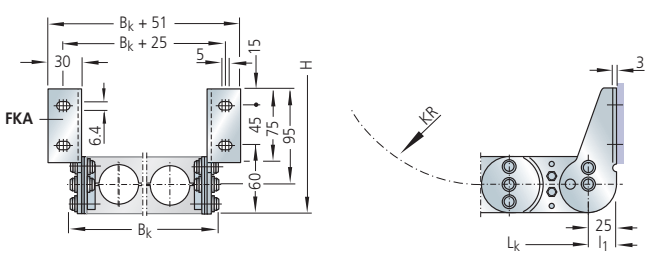

Different connection variants for fixed point and driver are possible according to the drawing information and are realized by different assembly of the connecting pieces.
The connection variants can also be changed at a later date if required.

Please state the desired connection variant according to the ordering key (see page 84).

Use our free project planning service.

Subject to change.

Type S 0650 / SX 0650

Driver connection

Connection variant MA

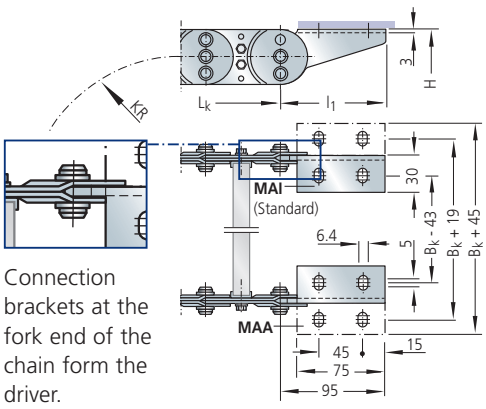

Connection brackets at the fork end of the chain form the driver.

Connection variant MI

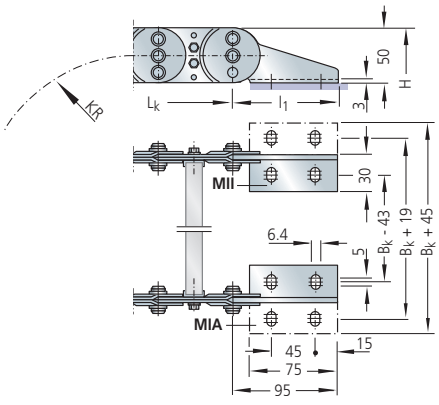

Connection variant MH

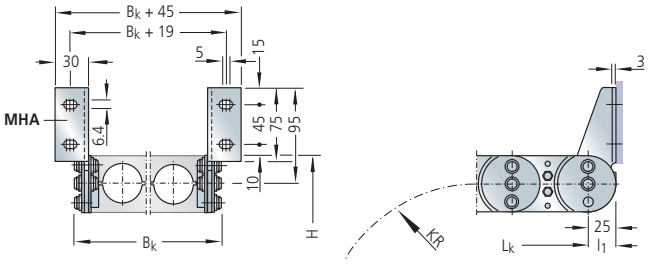

Connection variant MK

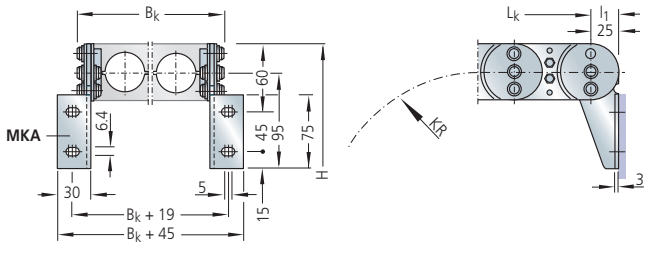

Type S 0650 / SX 0650

Ordering – cable carrier

Cable Carrier

S 0650	.	180	-	LG	-	135	-	St	-	1430
Type		Stay width B_{St} in mm		Stay variant		Bend radius KR in mm		Chain band material		Chain length L_k in mm (without connection)

Chain band materials:

St = zinc-plated steel
ER 1 = stainless steel
ER 1S = sea water resistant stainless steel
ER 2 = high-strength stainless steel

More information:
See material overview on page 50.

Ordering – divider system

Divider system

TS 0	/	4
Divider system		Number of dividers n_T

See also the sample order for the respective divider system.

Ordering – connection

Connection

F	A	A	/	M	K	A
Fixed point	Connection type	Connection surface		Driver	Connection type	Connection surface

If no order designation for the connection is stated, we supply the connection variant **FAI/MAI (Standard)**.

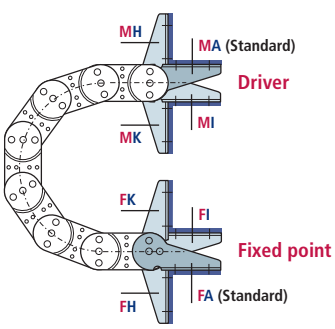

F – Fixed point
M – Driver

Connection type

A – Bolts facing outward **(Standard)**
I – Bolts facing inward
H – Threaded joint, rotated by 90° to the outside
K – Threaded joint, rotated by 90° to the inside

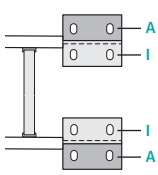

Connection surface

I – Connector surface inside (< B_k)
A – Connector surface outside (> B_k)

The connecting surfaces on the driver and fixed point can be be mounted on the outside or inside according to preference.

The connection type can easily be altered at a later date.

Guide channels
➤ from page 160

Strain relief devices
➤ from page 167

Cables for cable carrier systems
➤ in our LIFE-LINE Safety Cables catalogue.

Use our free project planning service.

Subject to change.

Type **S 0950**

Steel chain bands

Type **SX 0950**

Stainless steel chain bands

2D/3D-Data
www.kabelschlepp.de/cad

Materials

Chain bands and end connectors:
S 0950: **Steel**, zinc-plated
SX 0950: grade rust and acid resistant **steel**

STEEL GALVANIZED
STAINLESS STEEL RUST-FREE

Standard stay material: aluminium alloy*
Dividers and end pieces: plastic
➔ see material properties, page 50

Chain width

customer-specific
available in 1 mm width sections

WIDTHSECTIONS 1 mm

Chain pitch

95 mm

Bend radii

various **standard bend radii**
from 125 – 600 mm; intermediate radii upon request

* See description for the respective stay variant for details.

Stay variant RS

Clearance height h_i = **46 mm**
➤ **from page 87**

Stay variant RM

Clearance height h_i = **43 mm**
➤ **from page 89**

Stay variant RMR

Clearance height h_i = **40 mm**
➤ **from page 90**

Stay variant RR

Clearance height h_i = **42 mm**
➤ **from page 91**

Stay variant LG

max. **hole Ø = 48 mm**
➤ **from page 92**

Stay variant RMD

Clearance height h_i = **44 mm**
➤ **from page 93**

Type S 0950 / SX 0950

Rolling schematic illustration unsupported arrangement

Chain pitch t = 95 mm

Height h_G = 68 mm

Connection height H = 2 KR + 102 mm

Connection length l_1 = 125/34 mm
(see connection dimensions)

A flat and level surface is required for the cable carrier to extend and retract reliably.
Under certain conditions, a support tray needs to be installed (see page 163).

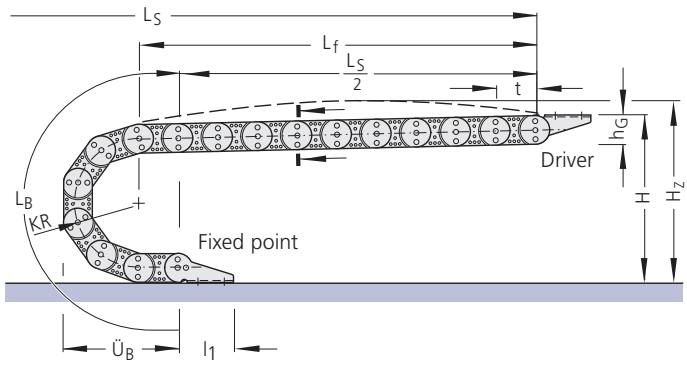

Variable sizes

depending on the bend radius

Dimensions in mm

Bend radius	125	140	170	200	260	290	320	350	410	600
Bend length L_B	773	820	914	1008	1197	1291	1385	1480	1668	2264
Bend overhang $Ü_B$	350	365	395	425	485	515	545	575	635	825
Height H	352	382	442	502	622	682	742	802	922	1302

Chain length:

$$L_k \approx \frac{L_S}{2} + L_B$$

rounded to pitch 95 mm

Installation height*:

$$H_Z = H + z$$

Pre-tension z ≈ 10 mm/m chain length
*required clear height

Load diagramm

Unsupported length L_f and
travel length L_S without support
depending on the additional load
(see design guidelines).

Load diagram for an intrinsic chain weight q_k of 7.6 kg/m.

If the intrinsic chain weight q_k of 7.6 kg/m is exceeded, the permissible additional load is reduced by the difference.

For circular operations, combinations of KR/RKR are possible.
Please contact us for details.

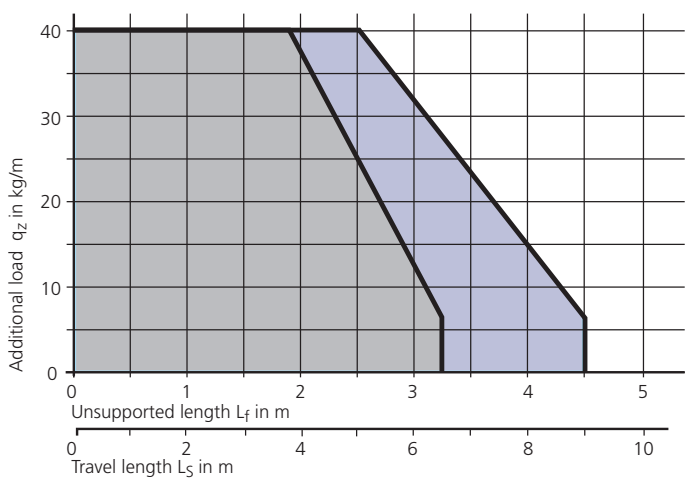

- **S 0950** material **galvanized steel**
- **SX 0950** material **ER 2**
- **SX 0950** material **ER 1 / ER 1S**

Use our free project planning service.

Subject to change.

Type S 0950 / SX 0950

Stay variant RS 2 – with bolted stays

- frame stay RS made of aluminium – standard design
- for lightweight to medium loads
- **Standard stay arrangement:** on every 2nd chain link. Stays can be fitted on every chain link, please specify when placing your order.
- bolted stays for maximum stability

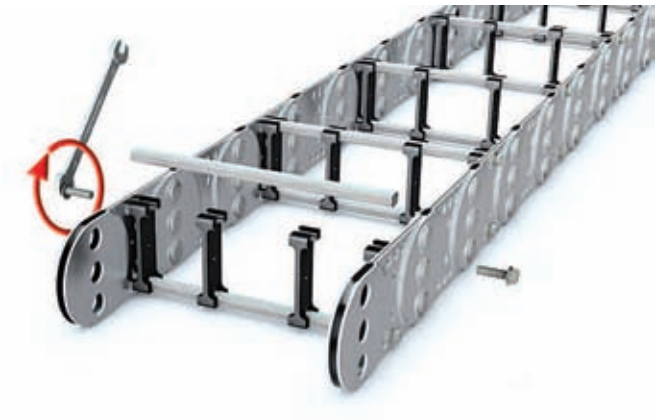

Chain width:
$B_k = B_i + 37$ mm

$B_{k\ min}$ = 150 mm
$B_{k\ max}$ = 400 mm

Stay width:
$B_{St} = B_i + 18$ mm
$B_{St} = B_k - 19$ mm

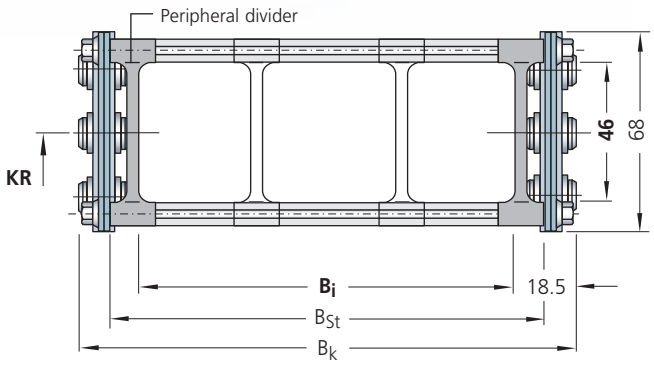

All chain cross sections according to sectional information in the schematic illustration.
The peripheral dividers are an integral part of the stay system and must not be ordered separately.

Intrinsic chain weight

for two band chains
depending on the chain width.

Weight of the chain bands:
7.2 kg/m (excluding stays)

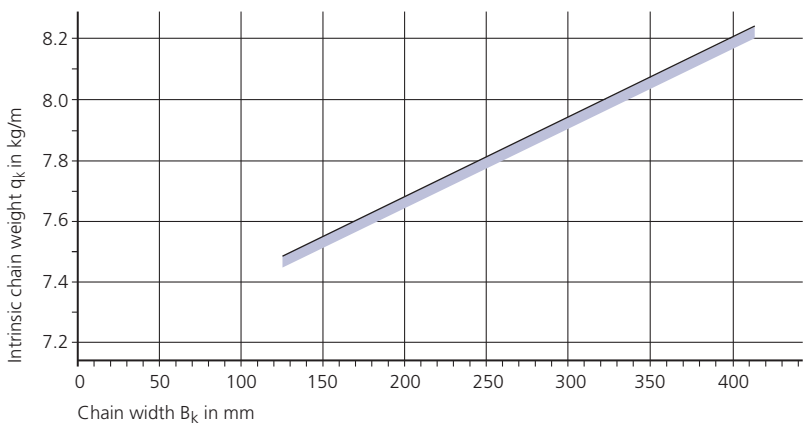

Divider system TS 0 for stay variant RS 2

The dividers are **movable**.

s_T	= 4 mm
$a_{T\ min}$	= 12 mm
$a_{x\ min}$	= 14 mm

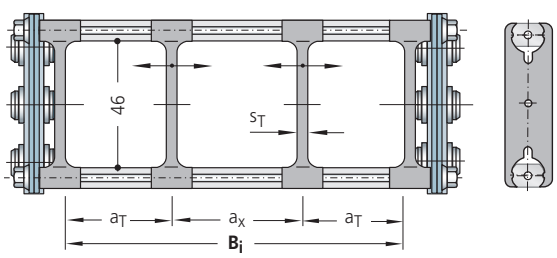

Example for ordering – divider system TS 0

TS 0	/	2
Divider system		Number of dividers n_T

Type S 0950 / SX 0950

Stay variant RS 1 – with a detachable stay

- frame stay RS made of aluminium – standard design
- for lightweight to medium loads
- **Standard opening options:**
  Outside: The cable carrier can be opened quickly and easily simply by rotating the stays through 90°.
  Inside: Screwed stays

  Optional: Bolted on the outside and opening inwards, please state when ordering.
- **Standard stay arrangement:**
  on every 2nd chain link.
  Stays can be fitted on every chain link, please specify when placing your order.

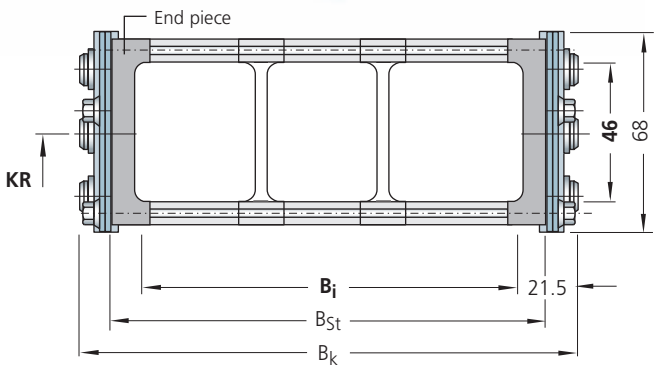

Chain width:
$B_k = B_i + 43$ mm

$B_{k\ min}$ = 150 mm
$B_{k\ max}$ = 300 mm

Stay width:
$B_{St} = B_i + 24$ mm
$B_{St} = B_k - 19$ mm

All chain cross sections according to sectional information in the schematic illustration.
The end pieces are an integral part of the stay system and must not be ordered separately.

Intrinsic chain weight

for two band chains
depending on the chain width.

Weight of the chain bands:
7.2 kg/m (excluding stays)

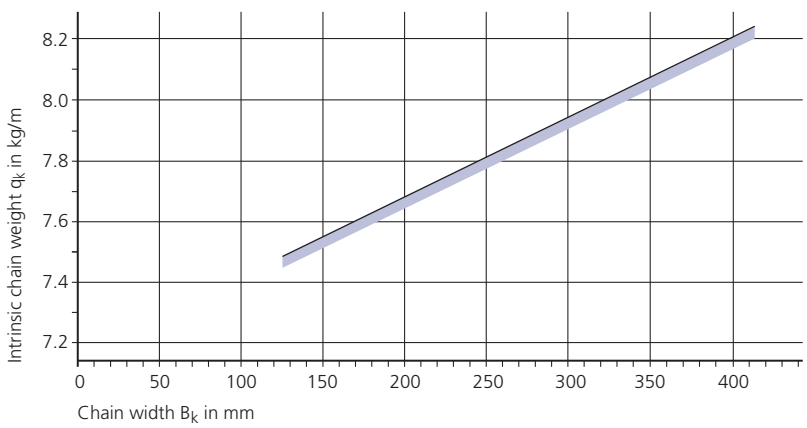

Divider system TS 0 for stay variant RS 1

The dividers are **movable**.

s_T	= 4 mm
$a_{T\ min}$	= 12 mm
$a_{x\ min}$	= 14 mm

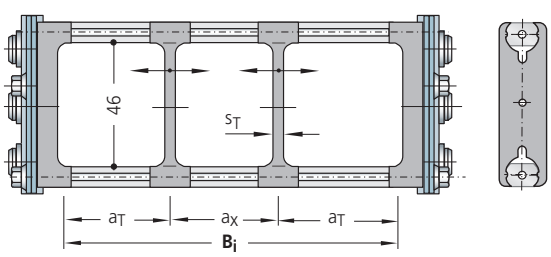

Example for ordering – divider system TS 0

TS 0	/	2
Divider system		Number of dividers n_T

Use our free project planning service.

Subject to change.

Type S 0950 / SX 0950

Stay variant RM – frame stay, solid design

- frame stay RM made of aluminium – solid design
- for heavy loads – maximum chain widths possible
- **Standard stay arrangement:** on every 2nd chain link. Stays can be fitted on every chain link, please specify when placing your order.
- bolted stays for maximum stability

Chain width:
$B_k = B_i + 37$ mm

$B_{k\ min}$ = 125 mm
$B_{k\ max}$ = 600 mm

Stay width:
$B_{St} = B_i + 18$ mm
$B_{St} = B_k - 19$ mm

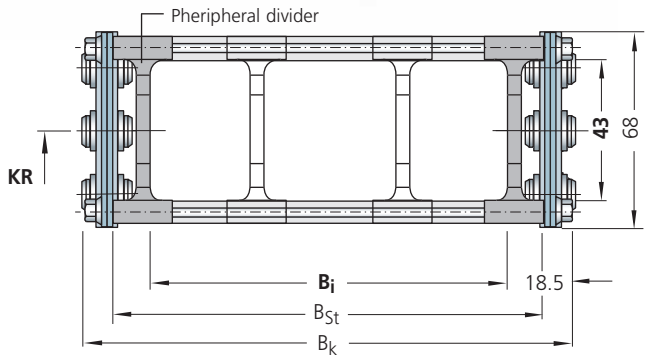

All chain cross sections according to sectional information in the schematic illustration.
The peripheral dividers are an integral part of the stay system and must not be ordered separately.

Intrinsic chain weight

for two band chains
depending on the chain width.

Weight of the chain bands:
7.2 kg/m (excluding stays)

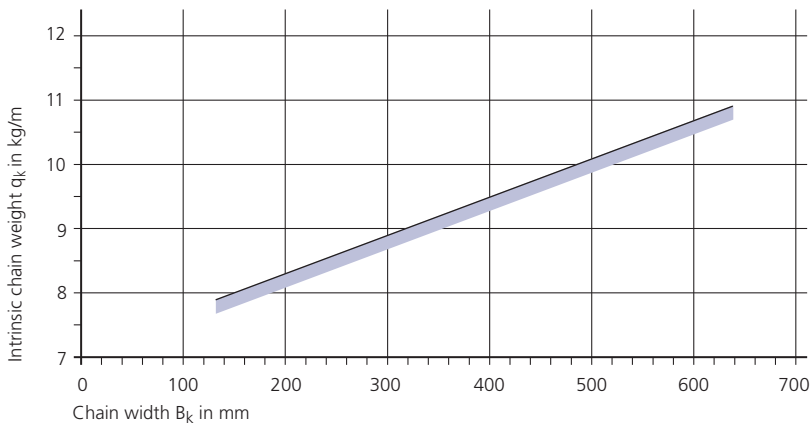

Divider system TS 0 for stay variant RM

The dividers are **movable**.

s_T	= 4 mm
$a_{T\ min}$	= 10 mm
$a_{x\ min}$	= 14 mm

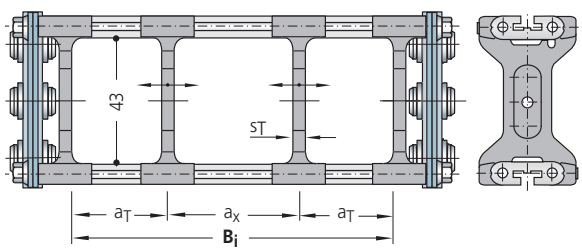

Example for ordering – divider system TS 0

TS 0	/	2
Divider system		Number of dividers n_T

Type S 0950 / SX 0950

Stay variant RMR – frame stay with plastic roller system

- gentle cable support due to rotatable plastic rollers
- ideal when using media hoses with "soft" sheaths
- stay profile made of aluminium – rollers made of plastic
- plastic dividers in roller version
- **Standard stay arrangement:** on every 2nd chain link. Stays can be fitted on every chain link, please specify when placing your order.
- bolted stays for maximum stability

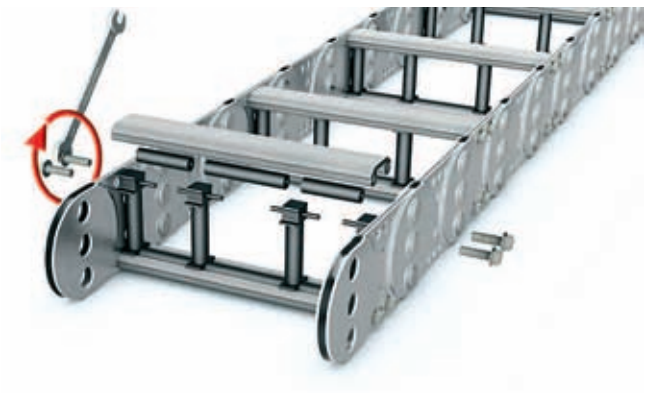

Chain width:
$B_k = B_i + 42$ mm

$B_{k\ min}$ = 150 mm
$B_{k\ max}$ = 600 mm

Stay width:
$B_{St} = B_i + 23$ mm
$B_{St} = B_k - 19$ mm

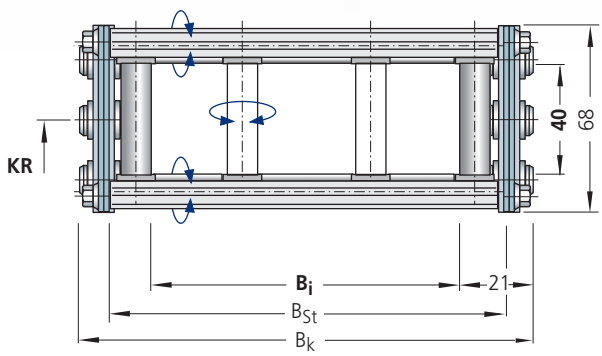

All chain cross sections according to the section information in the schematic illustration.

Intrinsic chain weight

for two band chains
depending on the chain width.

Weight of the chain bands:
7.2 kg/m (excluding stays)

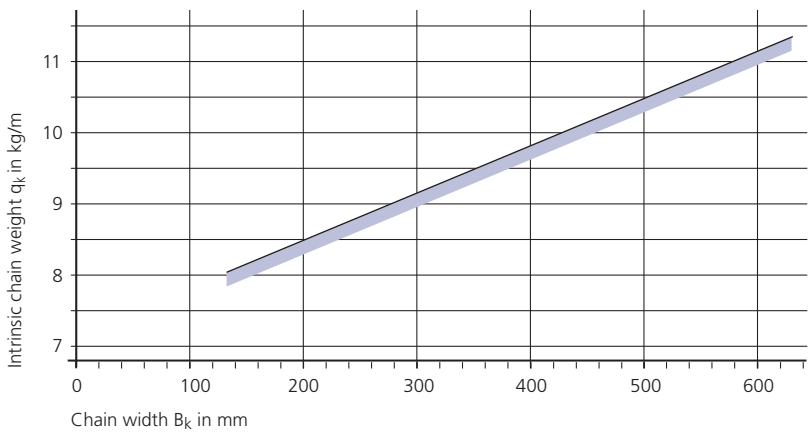

Divider system TS 0 for stay variant RMR

The standard dividers are **fixed**.

Moveable dividers (s_T = 4 mm) can be used as an option. Please specify when placing your order.

d_R	= 10 mm
$a_{T\ min}$	= 11.5 mm
$a_{x\ min}$	= 37 mm

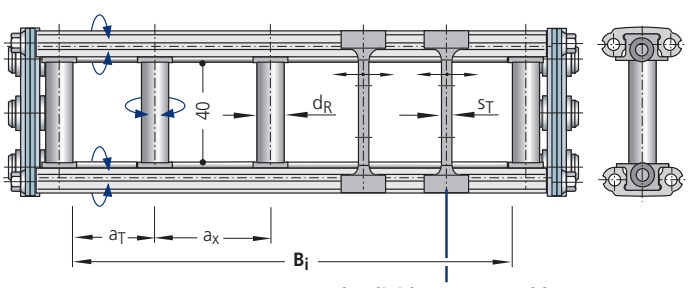

The dividers are movable.

Example for ordering – divider system TS 0

TS 0	/	2
Divider system		Number of dividers n_T

Please state the dimensions a_T/a_x when ordering. Possibly enclose a sketch with dimensions.

Use our free project planning service.

Subject to change.

Type S 0950 / SX 0950

Stay variant RR – frame stay, tube design

- gentle cable support due to rotating metal tubes
- ideal when using media hoses with "soft" sheaths
- possible materials of the axles, tubes and dividers:
  - axles, galvanized steel with plastic dividers **(Standard)**
  - axles and dividers made of galvanized steel
  - axles and dividers made of stainless steel ER 1, ER 1S
- **Standard stay arrangement:** on every 2nd chain link. Stays can be fitted on every chain link, please specify when placing your order.
- bolted stays for maximum stability

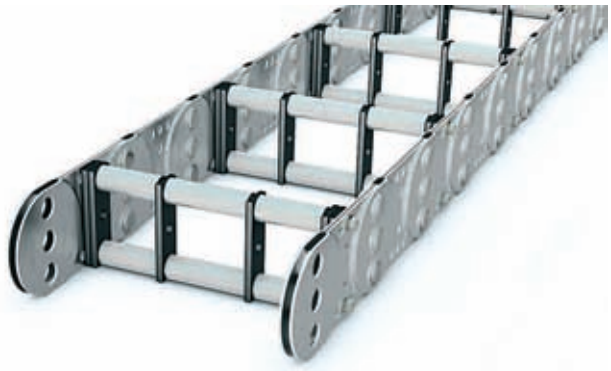

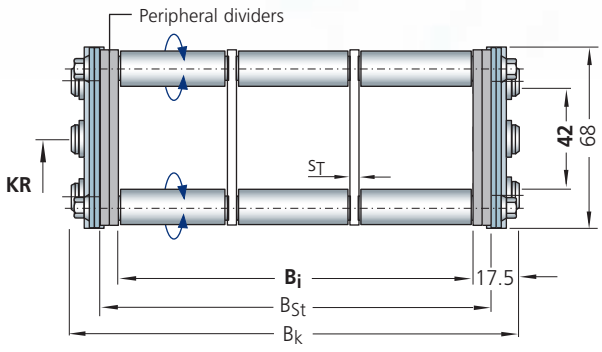

Chain width:
$B_k = B_i + 35$ mm

$B_{k\,min}$ = 150 mm
$B_{k\,max}$ = 500 mm

Stay width:
$B_{St} = B_i + 16$ mm
$B_{St} = B_k - 19$ mm

All chain cross sections according to sectional information in the schematic illustration.
The peripheral dividers are an integral part of the stay system and must not be ordered separately.

Intrinsic chain weight

for two band chains
depending on the chain width.

Weight of the chain bands:
7.2 kg/m (excluding stays)

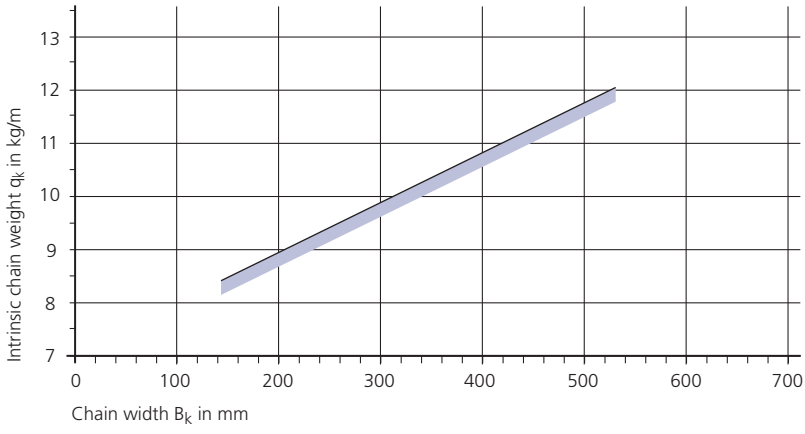

Divider systems TS 0 and TS 1 for stay variant RR

The dividers are **fixed**.

TS 0: without height subdivision
TS 1: with continuous centric height subdivision

s_T	= 4 mm
$a_{T\,min}$	= 20 mm
$a_{x\,min}$	= 20 mm

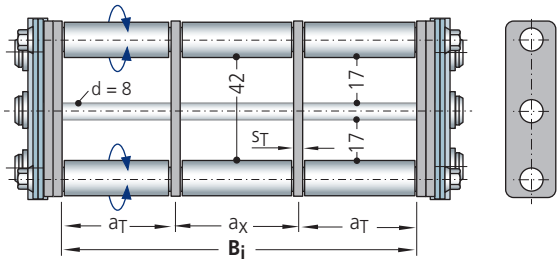

Example for ordering – divider system

TS 0	/	2
Divider system		Number of dividers n_T

Please state the dimensions a_T/a_x when ordering. Possibly enclose a sketch with dimensions.

Type S 0950 / SX 0950

Stay variant LG – hole stay made of aluminium, split design

- optimum cable guidance in the neutral bending line is possible
- drilling pattern individually adapted to the application
- high stability due to solid construction
- split design as standard for easy laying of the cables
- **Standard stay arrangement:** on every 2nd chain link. Stays can be fitted on every chain link, please specify when placing your order.
- bolted stays for maximum stability – also available not split

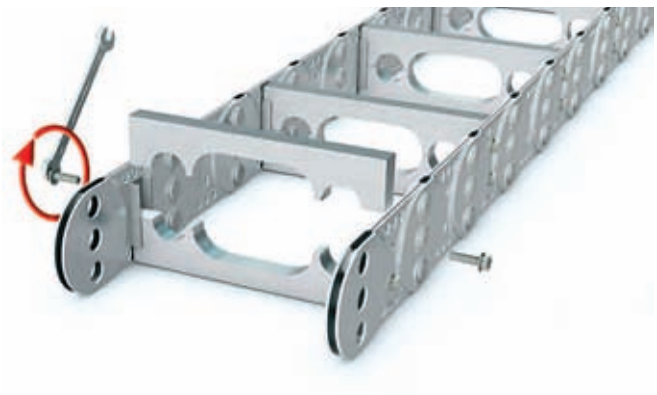

Chain width:

$B_k = \Sigma D + \Sigma c + 43$ mm

$B_{k\,min}$ = 125 mm
$B_{k\,max}$ = 600 mm

Stay width:

$B_{St} = \Sigma D + \Sigma c + 22$ mm

$B_i = B_{St} - 2\,a_0$

$B_{St} = B_k - 21$ mm

D_{max} = 48 mm
c_{min} = 4 mm
$a_{0\,min}$ = 11 mm

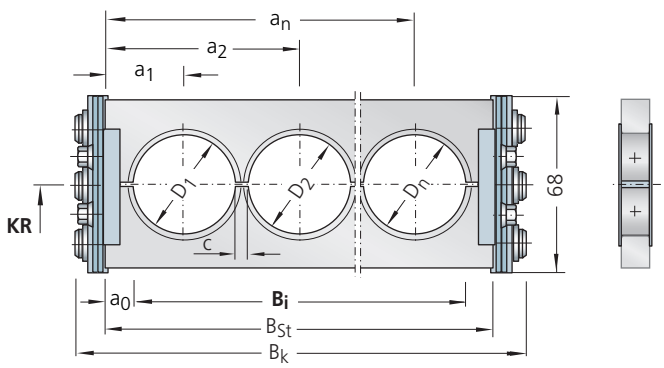

All chain cross sections according to sectional information in the schematic illustration.

Intrinsic chain weight

for two band chains
depending on the chain width.

Hole area of the hole stay is approx. 50 %

Weight of the chain bands:
7.2 kg/m (excluding stays)

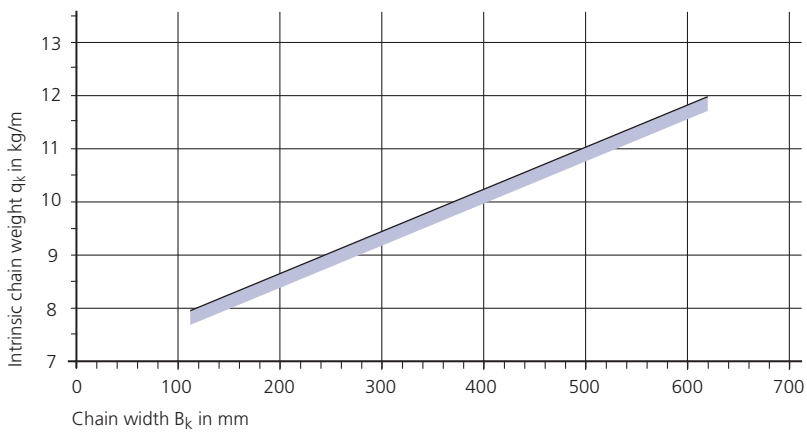

Use our free project planning service.

Subject to change.

Type S 0950 / SX 0950

Stay variant RMD – covered cable carrier, STEEL-TUBE

- **aluminium cover system** for protecting the cables and hoses
- for applications where chips or severe contamination occur
- bolted aluminium cover for maximum stability

Steel band covers are also available as light-weight, economically priced alternatives to covering with the aluminium cover system, see page 166.

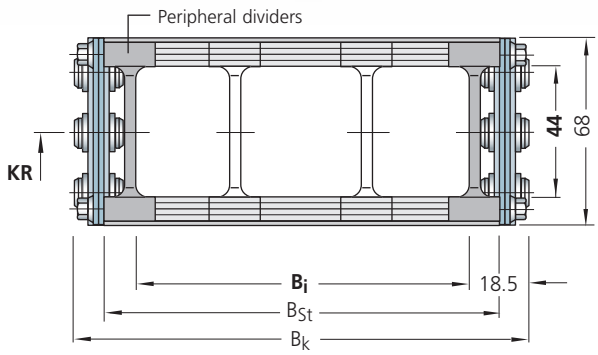

All chain cross sections according to sectional information in the schematic illustration.
The peripheral dividers are an integral part of the stay system and must not be ordered separately.

Chain width:
$B_k = B_i + 37$ mm

$B_{k\,min}$ = 125 mm
$B_{k\,max}$ = 600 mm

Stay width:
$B_{St} = B_i + 18$ mm
$B_{St} = B_k - 19$ mm

Minimum bend radius
KR_{min} = 170 mm

Intrinsic chain weight

for two band chains
depending on the chain width.

Weight of the chain bands:
7.2 kg/m (excluding stays)

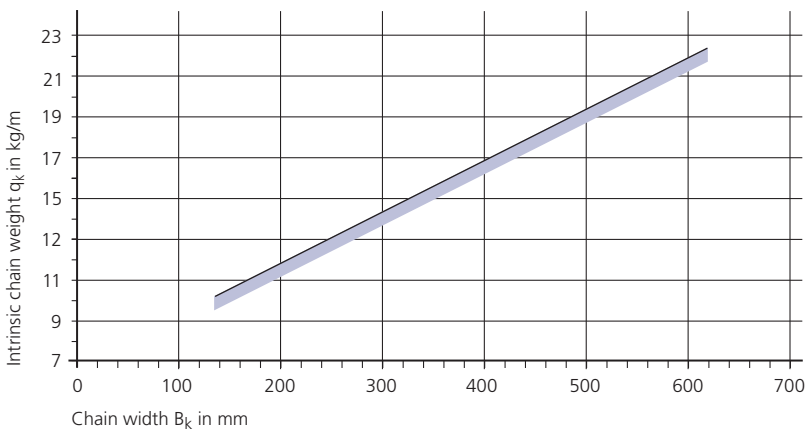

Divider system TS 0 for stay variant RMD

The dividers are **movable**.

s_T	= 4 mm
$a_{T\,min}$	= 12 mm
$a_{x\,min}$	= 14 mm

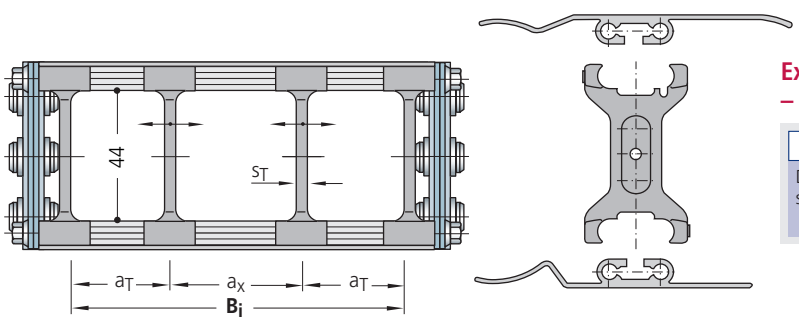

Example for ordering – divider system TS 0

TS 0	/	2
Divider system		Number of dividers n_T

Type S 0950 / SX 0950

Fixed point connection

Connection variant FA

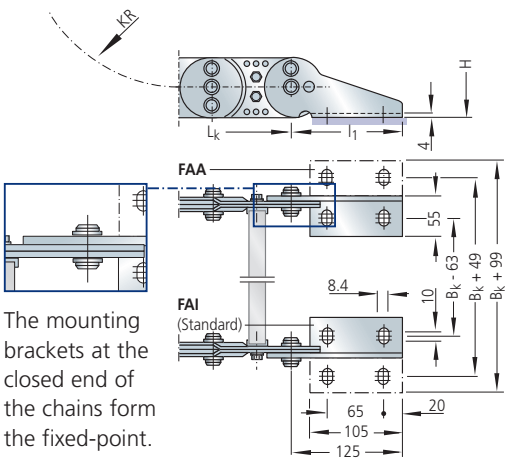

The mounting brackets at the closed end of the chains form the fixed-point.

Connection variant FI

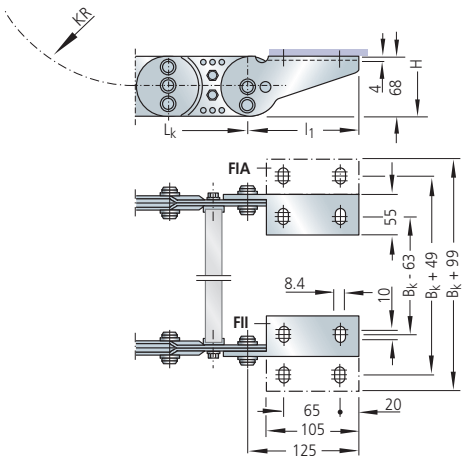

Connection variant FH

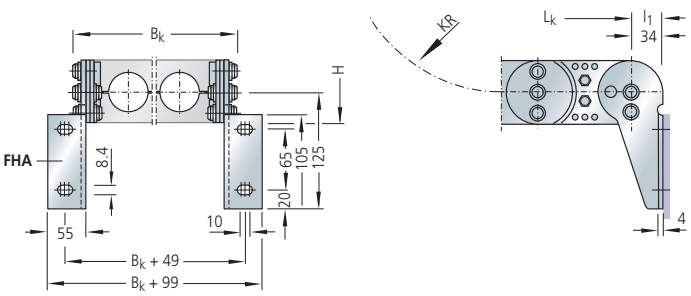

Connection variant FK

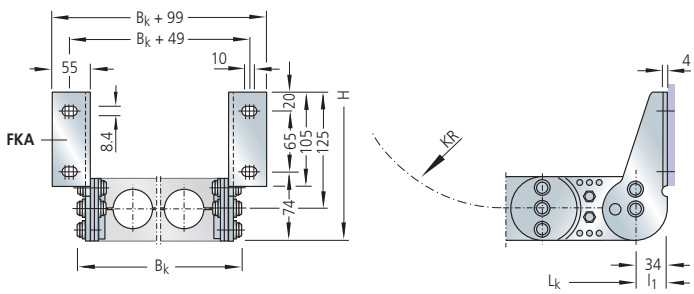

Different connection variants for fixed point and driver are possible according to the drawing information and are realized by different assembly of the connecting pieces.
The connection variants can also be changed at a later date if required.

Please state the desired connection variant according to the ordering key (see page 96).

Use our free project planning service.

Subject to change.

Type S 0950 / SX 0950

Driver connection

Connection variant MA

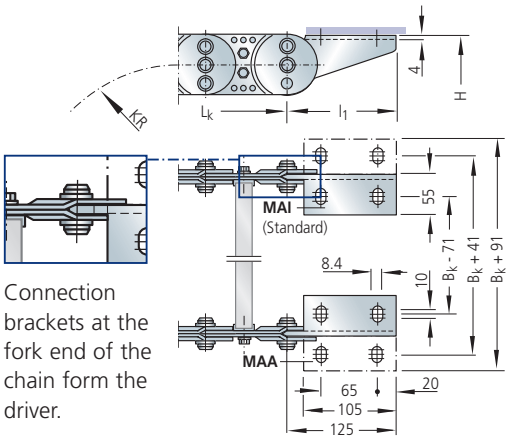

Connection brackets at the fork end of the chain form the driver.

Connection variant MI

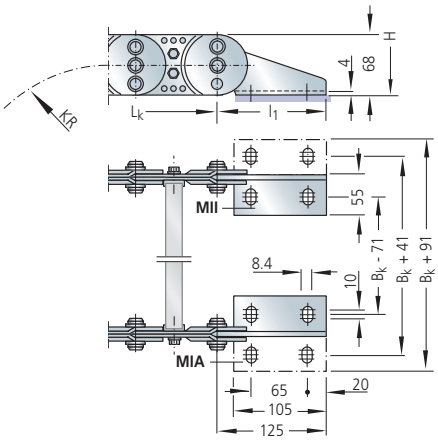

Connection variant MH

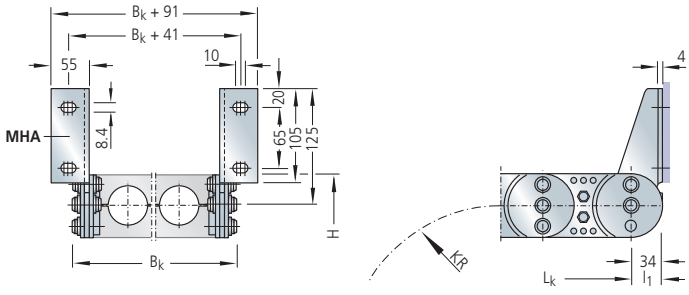

Connection variant MK

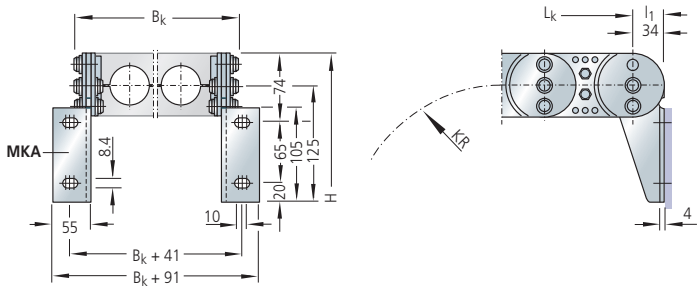

Type S 0950 / SX 0950

Ordering – cable carrier

Cable Carrier

S 0950	.	300	-	RS 1	-	200	-	St	-	2375
Type		Stay width B_{St} in mm		Stay variant		Bend radius KR in mm		Chain band material		Chain length L_k in mm (without connection)

Chain band materials:

St = zinc-plated steel
ER 1 = stainless steel
ER 1S = sea water resistant stainless steel
ER 2 = high-strength stainless steel

More information:
See material overview on page 50.

Ordering – divider system

Divider system

TS 0	/	4
Divider system		Number of dividers n_T

See also the sample order for the respective divider system.

Ordering – connection

Connection

F	A	A	/	M	K	A
Fixed point	Connection type	Connection surface		Driver	Connection type	Connection surface

If no order designation for the connection is stated, we supply the connection variant **FAI/MAI (Standard)**.

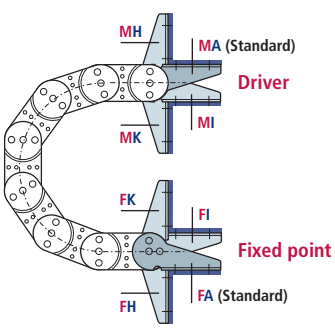

F – Fixed point
M – Driver

Connection type

A – Bolts facing outward **(Standard)**
I – Bolts facing inward
H – Threaded joint, rotated by 90° to the outside
K – Threaded joint, rotated by 90° to the inside

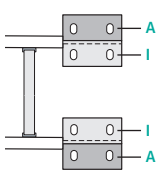

Connection surface

I – Connector surface inside (< B_k)
A – Connector surface outside (> B_k)

The connecting surfaces on the driver and fixed point can be be mounted on the outside or inside according to preference.

The connection type can easily be altered at a later date.

Guide channels
➤ from page 160

Strain relief devices
➤ from page 167

Cables for cable carrier systems
➤ in our LIFE-LINE Safety Cables catalogue.

Use our free project planning service.

Subject to change.

Type **S 1250**

Steel chain bands

Type **SX 1250**

Stainless steel chain bands

2D/3D-Data
www.kabelschlepp.de/cad

Materials

Chain bands and end connectors:
S 1250: **Steel**, zinc-plated
SX 1250: grade rust and acid resistant **steel**

STEEL GALVANIZED
STAINLESS STEEL RUST-FREE

Standard stay material: aluminium alloy*
Dividers and end pieces: plastic
➔ see material properties, page 50

Chain width

customer-specific
available in 1 mm width sections

WIDTHSECTIONS 1 mm

Chain pitch

125 mm

Bend radii

various **standard bend radii**
from 145 – 1000 mm; intermediate radii upon request

* See description for the respective stay variant for details.

Also available with straight link plates: Type S/SX 1252 – please contact us!

Stay variant RS

Clearance height h_i = **72 mm**
➤ **from page 99**

Stay variant RV

Clearance height h_i = **72 mm**
➤ **from page 101**

Stay variant RM

Clearance height h_i = **69 mm**
➤ **from page 105**

Stay variant RMA

Clearance height $h_{i\,max}$ = **200 mm**
➤ **from page 107**

Stay variant RMR

Clearance height h_i = **66 mm**
➤ **from page 108**

Stay variant RR

Clearance height h_i = **66 mm**
➤ **from page 109**

Stay variant LG

max. **hole Ø = 74 mm**
➤ **from page 110**

Stay variant RMD

Clearance height h_i = **69 mm**
➤ **from page 111**

Type S 1250 / SX 1250

Rolling schematic illustration unsupported arrangement

Chain pitch t = 125 mm

Height h_G = 94 mm

Connection height H = 2 KR + 141 mm

Connection length l_1 = 155/47 mm
(see connection dimensions)

A flat and level surface is required for the cable carrier to extend and retract reliably.
Under certain conditions, a support tray needs to be installed (see page 163).

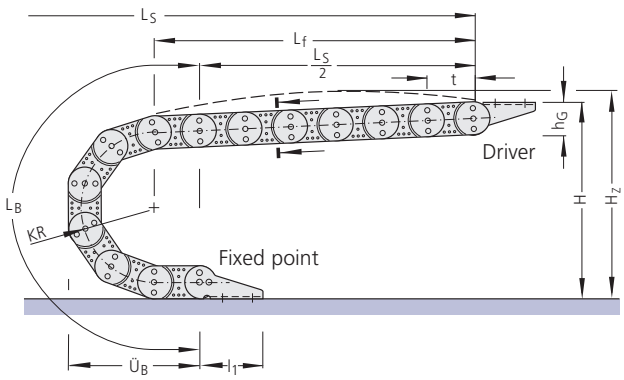

Variable sizes

depending on the bend radius

Dimensions in mm

Bend radius	145	200	220	260	300	340	380	420	460	500	540	600	1000
Bend length L_B	955	1128	1191	1317	1442	1568	1694	1820	1945	2071	2196	2385	3640
Bend overhang $Ü_B$	442	497	517	557	597	637	677	717	757	797	837	897	1297
Height H	431	541	581	661	741	821	901	981	1061	1141	1221	1341	2141

Chain length:

$$L_k \approx \frac{L_S}{2} + L_B$$

rounded to pitch 125 mm

Installation height*:

$$H_Z = H + z$$

Pre-tension z ≈ 10 mm/m chain length
*required clear height

Load diagramm

Unsupported length L_f and **travel length L_S without support** depending on the additional load (see design guidelines).

Load diagram for an intrinsic chain weight q_k of 13 kg/m.

If the intrinsic chain weight q_k of 13 kg/m is exceeded, the permissible additional load is reduced by the difference.

For circular operations, combinations of KR/RKR are possible. Please contact us for details.

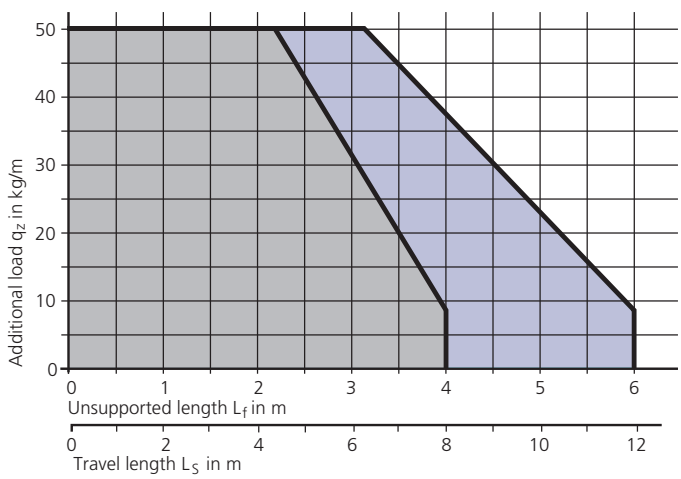

- **S 1250** material **galvanized steel**
- **SX 1250** material **ER 2**
- **SX 1250** material **ER 1 / ER 1S**

Use our free project planning service.

Subject to change.

Type S 1250 / SX 1250

Stay variant RS 2 – with bolted stays

- frame stay RS made of aluminium – standard design
- for lightweight to medium loads
- **Standard stay arrangement:** on every 2nd chain link. Stays can be fitted on every chain link, please specify when placing your order.
- bolted stays for maximum stability

Chain width:
$B_k = B_i + 44$ mm

$B_{k\ min}$ = 200 mm
$B_{k\ max}$ = 500 mm

Stay width:
$B_{St} = B_i + 20$ mm
$B_{St} = B_k - 24$ mm

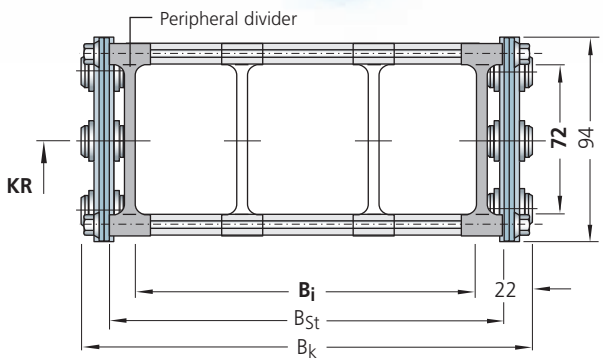

All chain cross sections according to sectional information in the schematic illustration.
The peripheral dividers are an integral part of the stay system and must not be ordered separately.

Intrinsic chain weight

for two band chains
depending on the chain width.

Weight of the chain bands:
12 kg/m (excluding stays)

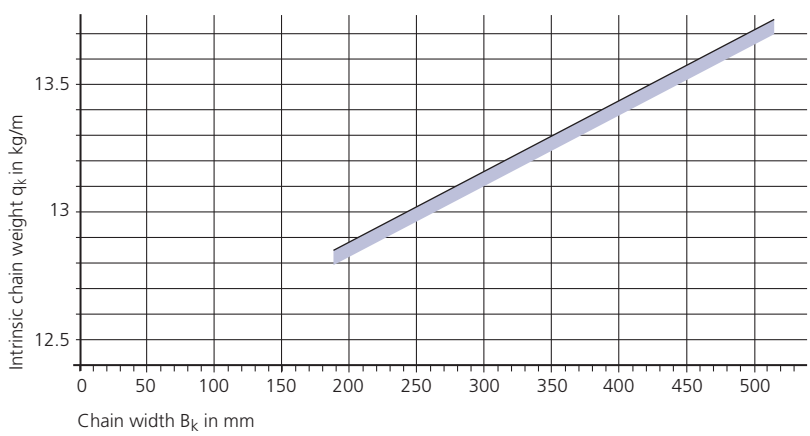

Divider system TS 0 for stay variant RS 2

The dividers are **movable**.

s_T	= 5 mm
$a_{T\ min}$	= 12.5 mm
$a_{x\ min}$	= 15 mm

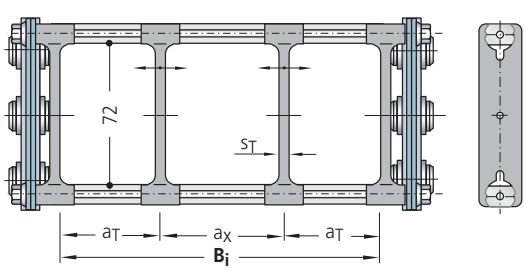

Example for ordering – divider system TS 0

TS 0	/	2
Divider system		Number of dividers n_T

Type S 1250 / SX 1250

Stay variant RS 1 – with a detachable stay

- frame stay RS made of aluminium – standard design
- for lightweight to medium loads
- **Standard opening options:**
  Outside: The cable carrier can be opened quickly and easily simply by rotating the stays through 90°.
  Inside: Screwed stays

  Optional: Bolted on the outside and opening inwards, please state when ordering.
- **Standard stay arrangement:**
  on every 2nd chain link.
  Stays can be fitted on every chain link, please specify when placing your order.

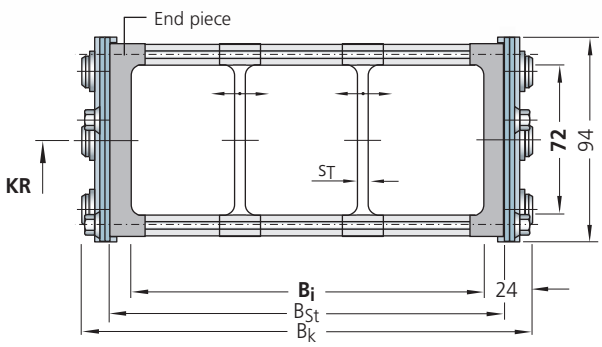

Chain width:
$B_k = B_i + 48$ mm

$B_{k\ min}$ = 200 mm
$B_{k\ max}$ = 400 mm

Stay width:
$B_{St} = B_i + 24$ mm
$B_{St} = B_k - 24$ mm

All chain cross sections according to sectional information in the schematic illustration.
The end pieces are an integral part of the stay system and must not be ordered separately.

Intrinsic chain weight

for two band chains
depending on the chain width.

Weight of the chain bands:
12 kg/m (excluding stays)

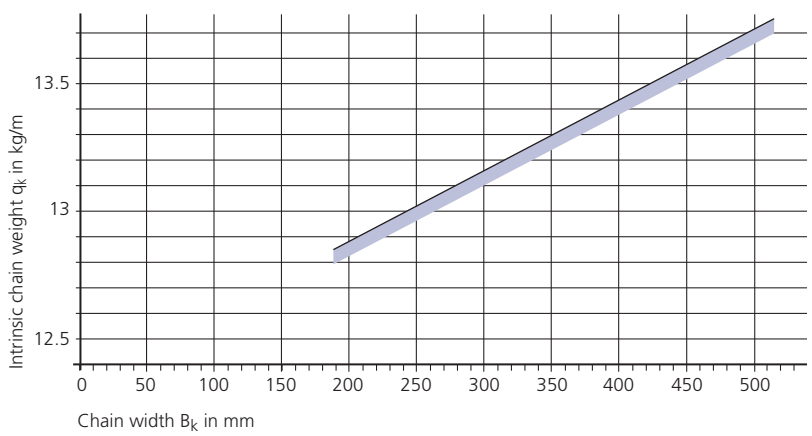

Divider system TS 0 for stay variant RS 1

The dividers are **movable**.

s_T	= 5 mm
$a_{T\ min}$	= 12.5 mm
$a_{x\ min}$	= 15 mm

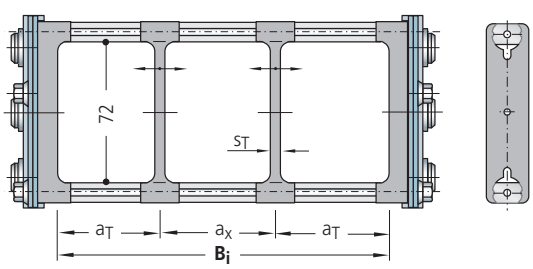

Example for ordering – divider system TS 0

TS 0	/	2
Divider system		Number of dividers n_T

Use our free project planning service.

Subject to change.

Type S 1250 / SX 1250

Stay variant RV – frame stay, reinforced design

- frame stay RV made of aluminium – reinforced design
- for medium to heavy loads and for large chain width
- **Standard stay arrangement:** on every 2nd chain link. Stays can be fitted on every chain link, please specify when placing your order.
- bolted stays for maximum stability

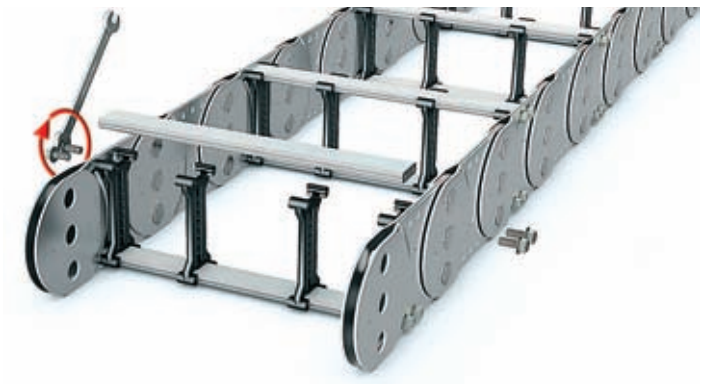

Chain width:
$B_k = B_i + 46$ mm

$B_{k\,min}$ = 200 mm
$B_{k\,max}$ = 600 mm

Stay width:
$B_{St} = B_i + 22$ mm
$B_{St} = B_k - 24$ mm

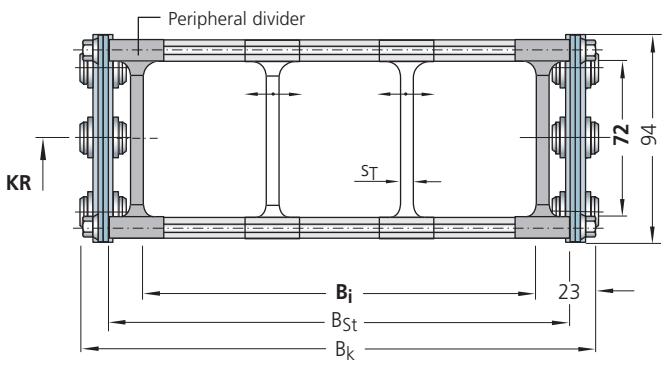

All chain cross sections according to sectional information in the schematic illustration.
The peripheral dividers are an integral part of the stay system and must not be ordered separately.

Intrinsic chain weight

for two band chains
depending on the chain width.

Weight of the chain bands:
12 kg/m (excluding stays)

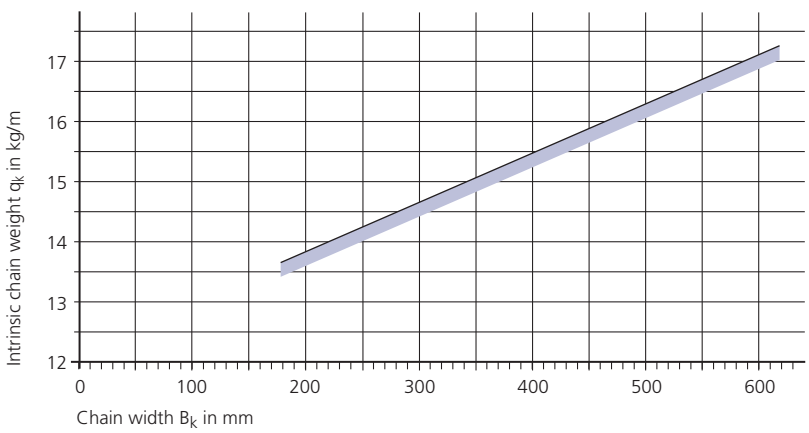

Divider system TS 0 for stay variant RV

The dividers are **movable**.

s_T	= 6 mm
$a_{T\,min}$	= 13 mm
$a_{x\,min}$	= 16 mm

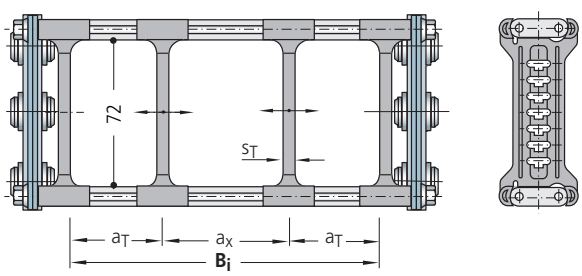

Example for ordering – divider system TS 0

TS 0	/	2
Divider system		Number of dividers n_T

Type S 1250 / SX 1250

Stay variant RV – frame stay, reinforced design

Divider system TS 1 for stay variant RV with continuous height subdivision

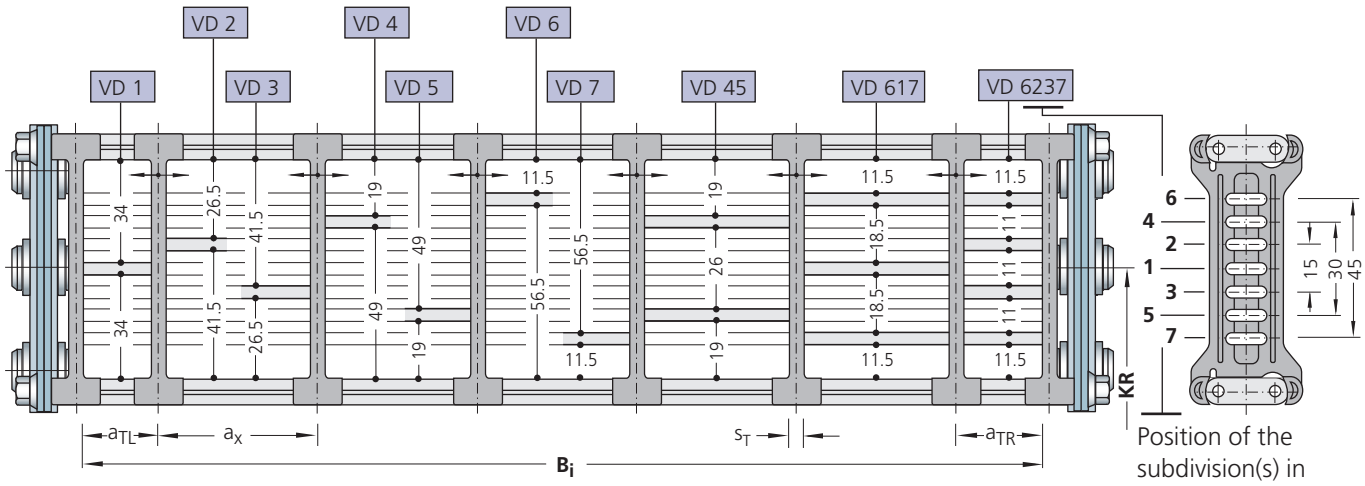

Position of the subdivision(s) in the divider

The dividers are movable. Height subdivision: **Aluminium profile 11 x 4 mm**

s_T	= 6 mm
$a_{T\ min}$	= 13 mm
$a_{x\ min}$	= 16 mm
$n_{T\ min}$	= 2

Example for ordering – divider system TS 1
with continuous height subdivision

TS 1	-	VD 1	/	6
Divider system		Height subdivision variant		Number of dividers n_T

Divider system TS 2 for stay variant RV with grid subdivision (1 mm grid)

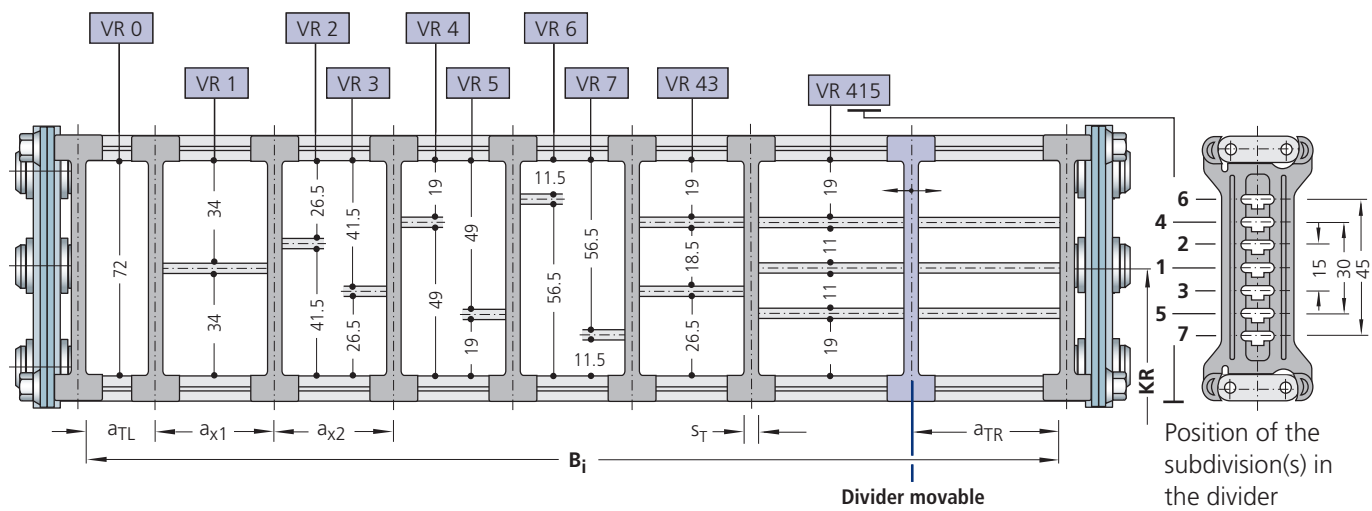

Position of the subdivision(s) in the divider

The dividers are fixed by the height subdivision, the complete divider system is movable.
Optional movable **dividers (s_T = 6 mm)** are available.

Height subdivision: **Aluminium profile 11 x 4 mm**

s_T	= 6 mm
$a_{T\ min}$	= 13 mm
$a_{x\ min}$	= 20 mm (with height subdivision)
$a_{x\ min}$	= 16 mm (for VR 0)
$n_{T\ min}$	= 2

Example for ordering – divider system TS 2
with grid subdivision

TS 2	-	K 1	-	VR 0	/	40
	-	K 2	-	VR 1	/	42
Divider system		Chamber		Variant of the height subdivision in chamber		Installation interval (mm)

Please state the chambers from left to right and the dimensions a_T/a_x when ordering. Possibly enclose a sketch with dimensions.

Use our free project planning service.

Subject to change.

Type S 1250 / SX 1250

Stay variant RV – frame stay, reinforced design

Divider system TS 3 for stay variant RV:
Section subdivision with partitions made of plastic or aluminium

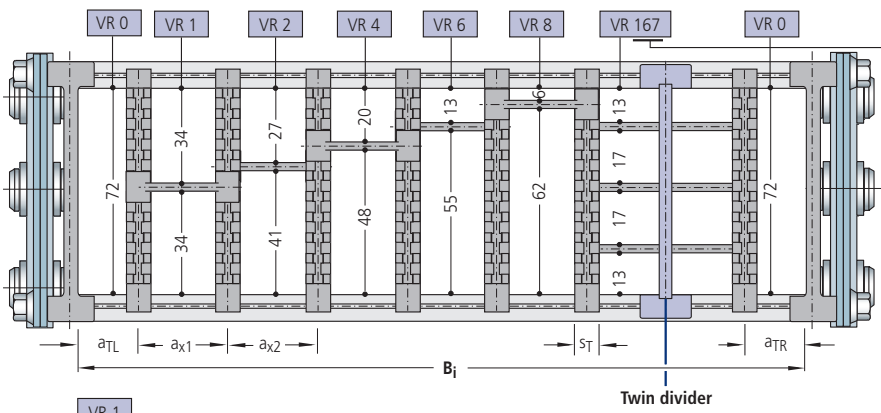

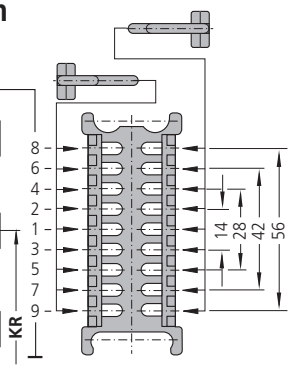

Position of the subdivision(s) in the divider

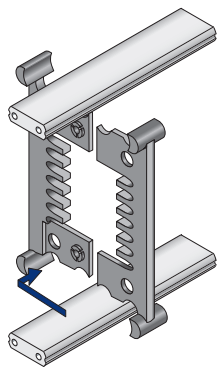

Assembly of twin divider

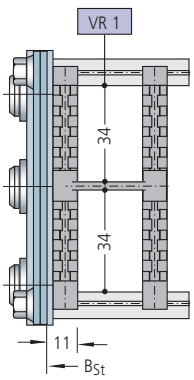

The dividers are fixed by the partitions, the complete divider system is movable.
Optional movable **twin dividers (s_T = 4 mm)** are available.
Twin dividers can also be assembled at a later date.

Dimensions without VR 0 chamber at the edge.
The outer dividers replace the peripheral dividers.

s_T	= 8 mm
$a_{T\,min}$	= 4 mm
$a_{x\,min}$	= see partitions dimensions
$n_{T\,min}$	= 2

Example for ordering – divider system TS 3
with partitions made of plastic

TS 3	-	K 1	-	VR 0	/	34
	-	K 2	-	VR 1	/	38
Divider system		Chamber		Variant of the height subdivision in chamber		Installation interval (mm)

Please state the chambers from left to right and the dimensions a_T/a_x when ordering. Possibly enclose a sketch with dimensions.

Please state additional twin dividers when ordering.

Dimensions of the partitions for TS 3

Partitions made of plastic (Standard)

Dimensions in mm

a_x (Center to center distance, dividers)									
16	18	23	28	32	33	38	43	48	58
64	68	78	80	88	96	112	**128**	**144**	**160**
176	**192**	**208**							

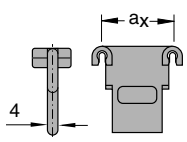

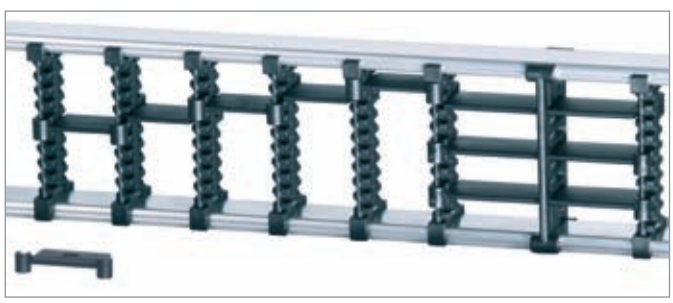

When using **partitions with a_x > 112 mm**, there must be an additional central support with a **twin divider**. Twin dividers are suitable for subsequent installation in the partition system.

Alternatively, partitions made of aluminium in 1 mm section widths **($a_{x\,min}$ = 42 mm)** are also available.

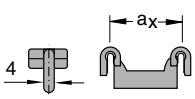

Type S 1250 / SX 1250

Stay variant RV – frame stay, reinforced design

Divider system TS 4 for stay variant RV:
Half dividers and continuous height subdivision

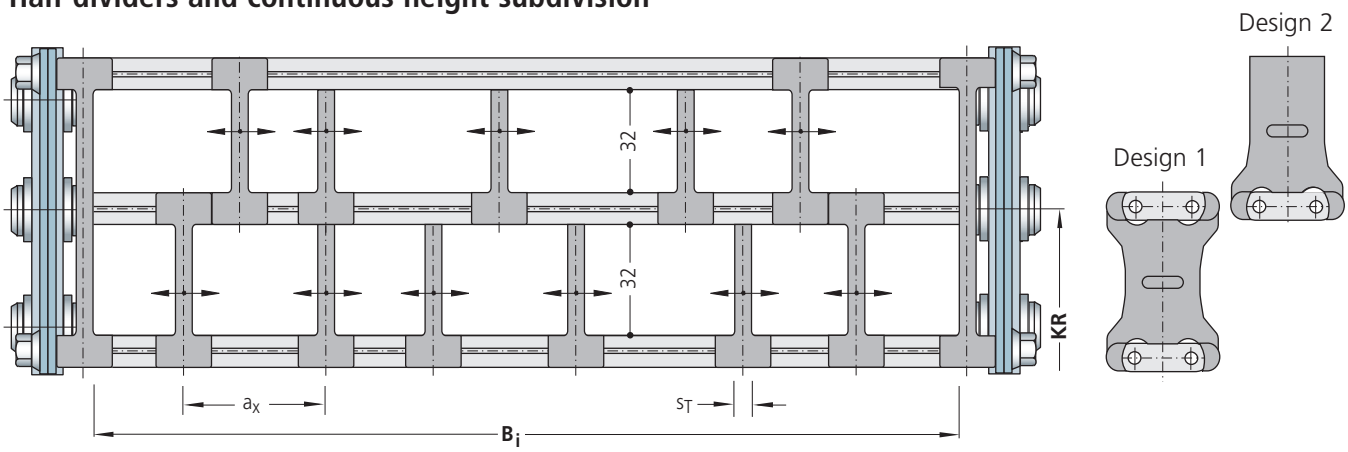

The half dividers are movable. Height subdivision: **Aluminium profile 27 x 8 mm**.
At least 2 half dividers with wrap-around on both sides (design 1)
must be installed in the top and bottom chambers in the vicinity of the chain band.

s_T	= 4 mm
$a_{x\ min}$	= 15 mm

Ordering – divider system TS 4
with half dividers and continuous height subdivision

Please enclose a sketch with dimensions.
Please state the dimensions a_T /a_X.

Use our free project planning service.

Subject to change.

Type S 1250 / SX 1250

Stay variant RM – frame stay, solid design

- frame stay RM made of aluminium – solid design
- for heavy loads – maximum chain widths possible
- **Standard stay arrangement:** on every 2nd chain link. Stays can be fitted on every chain link, please specify when placing your order.
- bolted stays for maximum stability

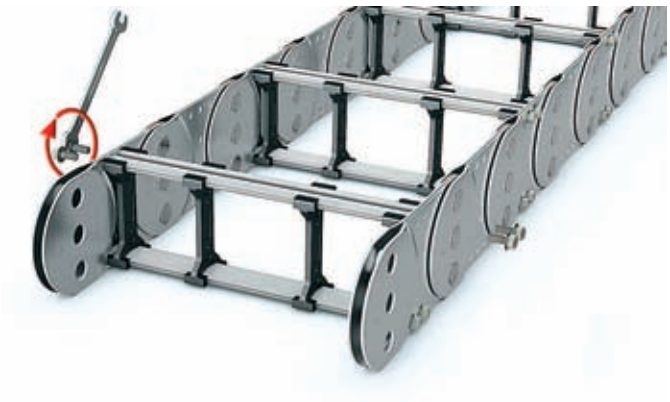

Chain width:
$B_k = B_i + 49$ mm

$B_{k\ min}$ = 200 mm
$B_{k\ max}$ = 800 mm

Stay width:
$B_{St} = B_i + 25$ mm
$B_{St} = B_k - 24$ mm

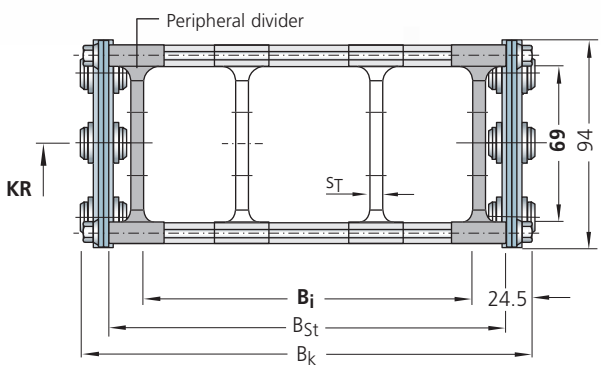

All chain cross sections according to sectional information in the schematic illustration.
The peripheral dividers are an integral part of the stay system and must not be ordered separately.

Intrinsic chain weight

for two band chains
depending on the chain width.

Weight of the chain bands:
12 kg/m (excluding stays)

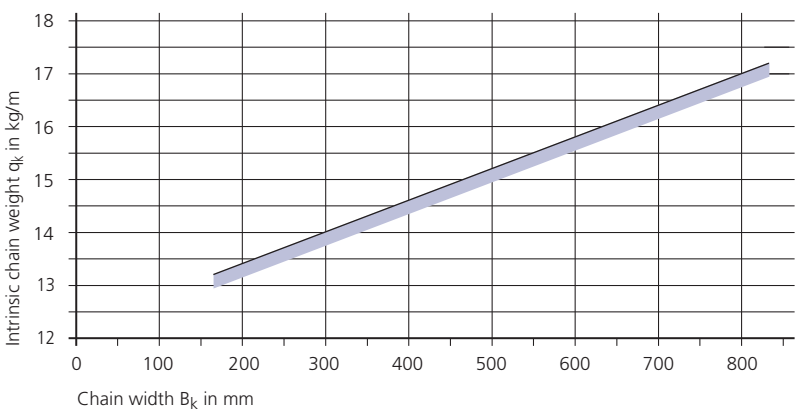

Divider system TS 0 for stay variant RM

The dividers are **movable**.

s_T	= 5 mm
$a_{T\ min}$	= 17.5 mm
$a_{x\ min}$	= 20 mm

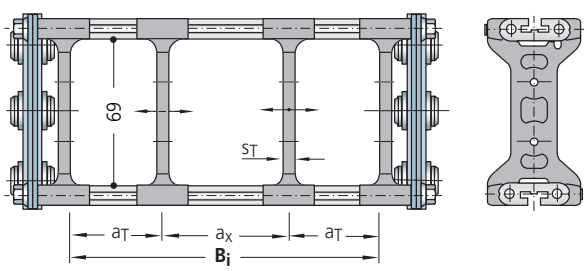

Example for ordering – divider system TS 0

TS 0	/	2
Divider system		Number of dividers n_T

Type S 1250 / SX 1250

Stay variant RM – frame stay, solid design

Divider system TS 5 for stay variant RM

Hole stay inserts made of plastic – split design

Chain width:
$B_K = \Sigma\, n_p \cdot B_p + 25$ mm

n_p = number of hole stay inserts
B_p = width of the hole stay inserts

Stay width:
$B_{ST} = \Sigma\, n_p \cdot B_p + 1$ mm

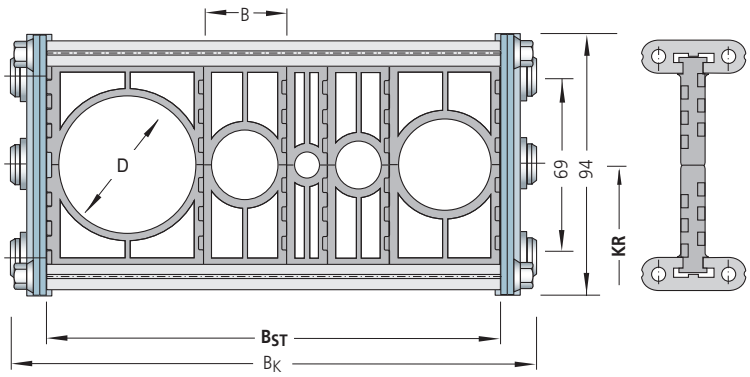

Hole diameter D	Width B
10	15
15	20
20	25
25	30
30	35
40	45
50	55

Dimensions in mm

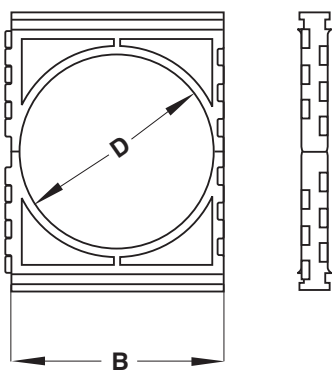

The hole stay inserts can be combined in any way.

Example for ordering – divider system TS 5

TS 5	/	50	-	30	-	25	-	40
Divider system		Hole diameter D_1		Hole diameter D_2		Hole diameter D_3		Hole diameter D_4

Please state the hole diameters and positions from left to right when ordering. Possibly enclose a sketch with dimensions.

Use our free project planning service.

Subject to change.

Type S 1250 / SX 1250

Stay variant RMA – mounting frame stay

- for very large cable diameters such as with air hoses.
- cables with diameters greater than the clearance height of the chain links can be routed
- installed on the inside or outside in the bend radius according to preference
- **Standard stay arrangement:** on every 2nd chain link. Stays can be fitted on every chain link, please specify when placing your order.
- bolted stays for maximum stability

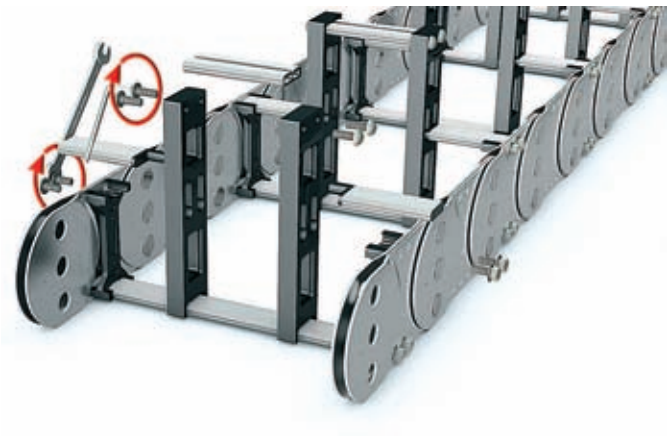

Chain width:

$B_k = B_i + 44$ mm

$B_{k\,min}$ = 200 mm
$B_{k\,max}$ = 600 mm
$B_{i1\,min}$ = 24 mm
$B_{i2\,min}$ = 128 mm
$B_{i3\,min}$ = 24 mm
s_{TA} = 15 mm

Stay width:

$B_{St} = B_i + 20$ mm
$B_{St} = B_k - 24$ mm

Available passage heights:

H_i = 130, 160, 200 mm

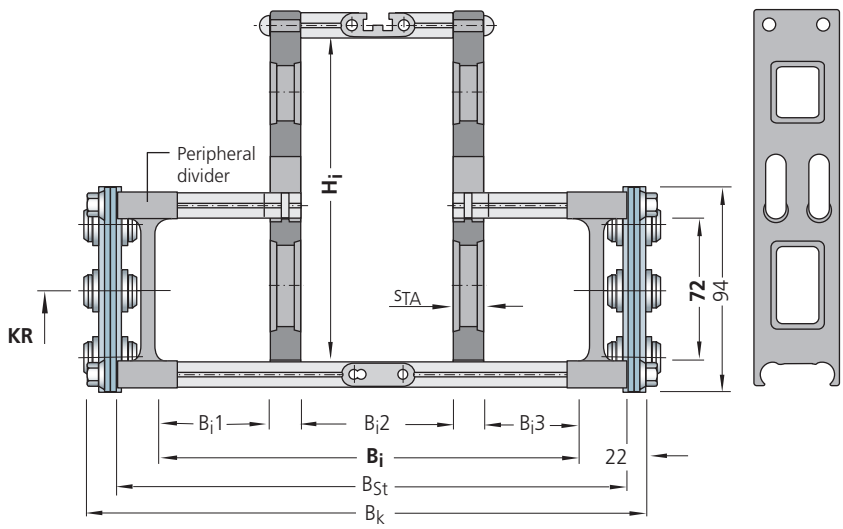

All chain cross sections according to sectional information in the schematic illustration.
The peripheral dividers are an integral part of the stay system and must not be ordered separately.

On account of the design parameters to be observed, we ask you to contact our technical consultants.

Assembly on the inside – observe minimum bend radius (half-stayed arrangement):
H_i = 130 mm: KR_{min} = 200 mm
H_i = 160 mm: KR_{min} = 260 mm
H_i = 200 mm: KR_{min} = 300 mm

Minimum bend radius full-stayed – please ask us about it.

The cable carrier must be supported on the chain band and not on the stays.

Intrinsic chain weight

for two band chains
depending on the chain width.

Weight of the chain bands:
12 kg/m (excluding stays)

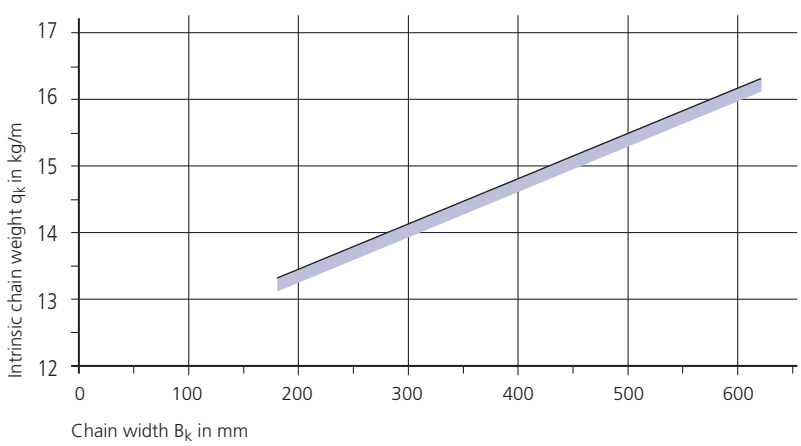

Type S 1250 / SX 1250

Stay variant RMR – frame stay with plastic roller system

- gentle cable support due to rotatable plastic rollers
- ideal when using media hoses with "soft" sheaths
- stay profile made of aluminium – rollers made of plastic
- plastic dividers in roller version
- **Standard stay arrangement:** on every 2nd chain link. Stays can be fitted on every chain link, please specify when placing your order.
- bolted stays for maximum stability

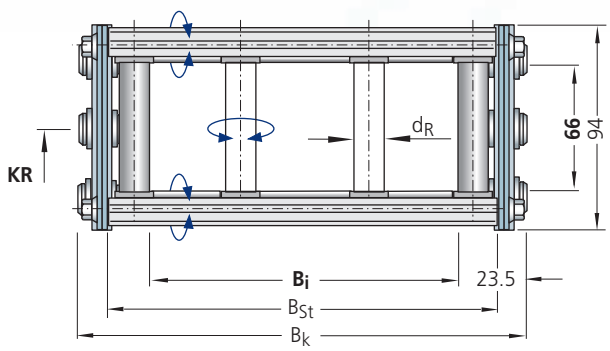

All chain cross sections according to the section information in the schematic illustration.

Chain width:
$B_k = B_i + 47$ mm

$B_{k\ min}$ = 200 mm
$B_{k\ max}$ = 800 mm

Stay width:
$B_{St} = B_i + 24$ mm
$B_{St} = B_k - 23$ mm

Intrinsic chain weight

for two band chains
depending on the chain width.

Weight of the chain bands:
12 kg/m (excluding stays)

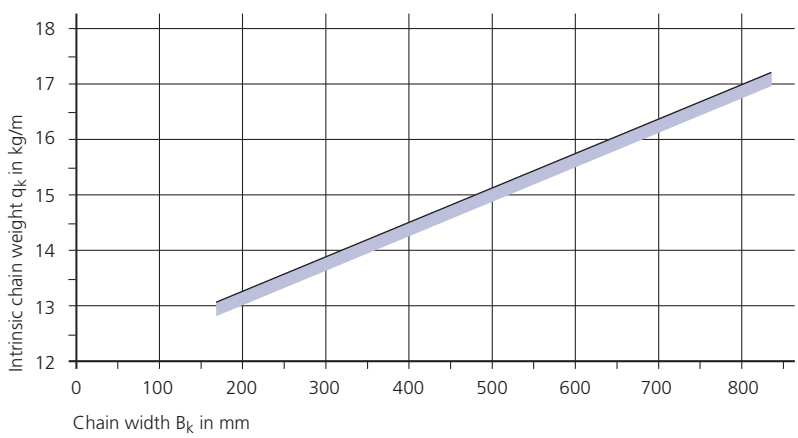

Divider system TS 0 for stay variant RMR

The standard dividers are **fixed**.

Moveable dividers (s_T = 4 mm) can be used as an option. Please state when ordering.

d_R	= 10 mm
$a_{T\ min}$	= 11.5 mm
$a_{x\ min}$	= 37 mm

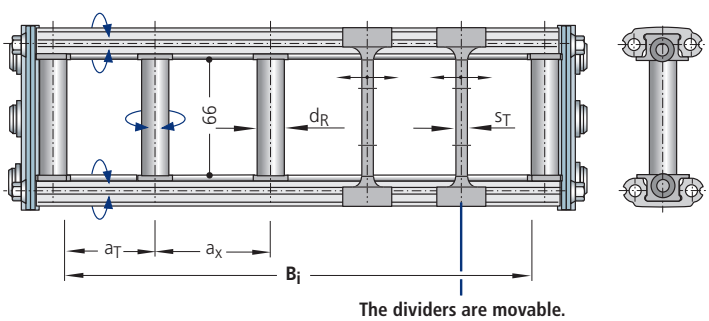

The dividers are movable.

Example for ordering – divider system TS 0

TS 0	/	2
Divider system		Number of dividers n_T

Please state the dimensions a_T/a_x when ordering. Possibly enclose a sketch with dimensions.

Use our free project planning service.

Subject to change.

Type S 1250 / SX 1250

Stay variant RR – frame stay, tube design

- gentle cable support due to rotating metal tubes
- ideal when using media hoses with "soft" sheaths
- possible materials of the axles, tubes and dividers:
  - axles and tubes, galvanized steel with plastic dividers **(Standard)**
  - axles, tubes and dividers made of galvanized steel
  - axles, tubes and dividers made of stainless steel ER 1, ER 1S
- **Standard stay arrangement:** on every 2nd chain link. Stays can be fitted on every chain link, please specify when placing your order.
- bolted stays for maximum stability

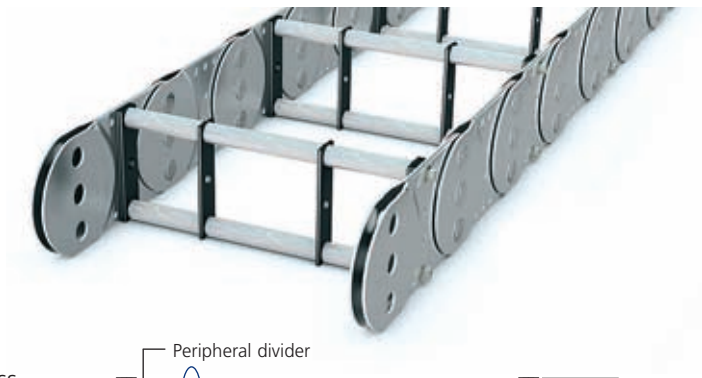

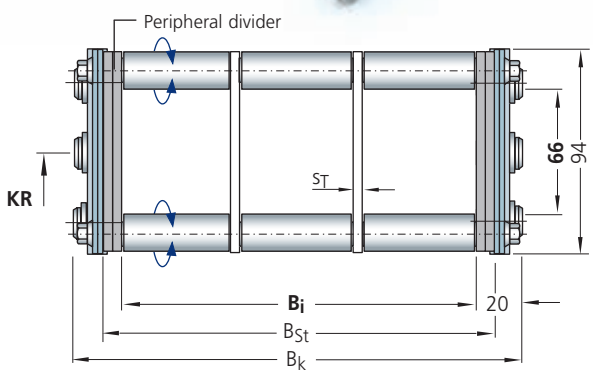

All chain cross sections according to sectional information in the schematic illustration.
The peripheral dividers are an integral part of the stay system and must not be ordered separately.

Chain width:
$B_k = B_i + 40$ mm

$B_{k\ min}$ = 200 mm
$B_{k\ max}$ = 600 mm

Stay width:
$B_{St} = B_i + 16$ mm
$B_{St} = B_k - 24$ mm

Intrinsic chain weight

for two band chains
depending on the chain width.

Weight of the chain bands:
12 kg/m (excluding stays)

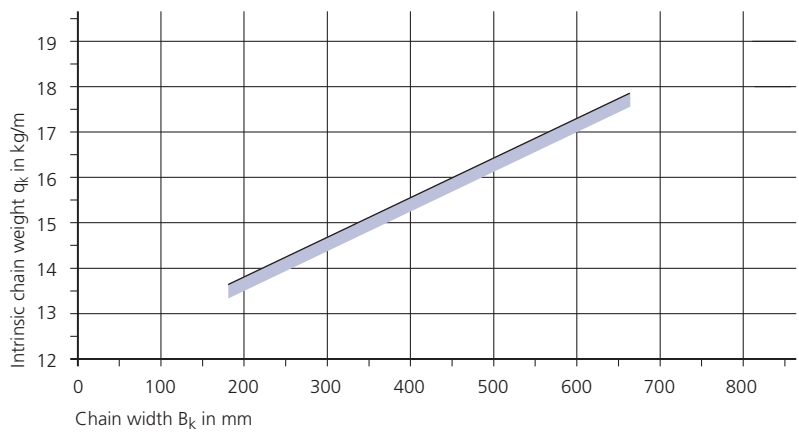

Divider systems TS 0 and TS 1 for stay variant RR

The dividers are **fixed**.

TS 0: without height subdivision
TS 1: with continuous centric height subdivision

s_T	= 4 mm
$a_{T\ min}$	= 30 mm
$a_{x\ min}$	= 30 mm

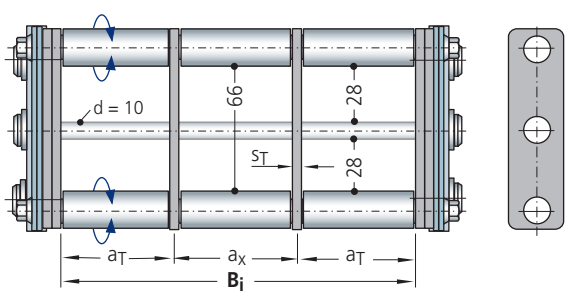

Example for ordering – divider system

TS 0	/	2
Divider system		Number of dividers n_T

Please state the dimensions a_T/a_x when ordering. Possibly enclose a sketch with dimensions.

Type S 1250 / SX 1250

Stay variant LG – hole stay made of aluminium, split design

- optimum cable guidance in the neutral bending line is possible
- drilling pattern individually adapted to the application
- high stability due to solid construction
- split design as standard for easy laying of the cables
- **Standard stay arrangement:** on every 2nd chain link. Stays can be fitted on every chain link, please specify when placing your order.
- bolted stays for maximum stability – also available not split

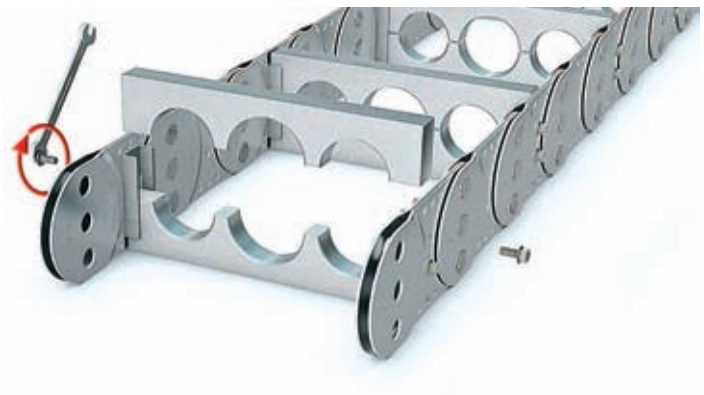

Chain width:

$B_k = \Sigma D + \Sigma c + 48$ mm

$B_{k\,min}$ = 130 mm
$B_{k\,max}$ = 800 mm

Stay width:

$B_{St} = \Sigma D + \Sigma c + 22$ mm

$B_i = B_{St} - 2\,a_0$

$B_{St} = B_k - 26$ mm

D_{max} = 74 mm
c_{min} = 4 mm
$a_{0\,min}$ = 11 mm

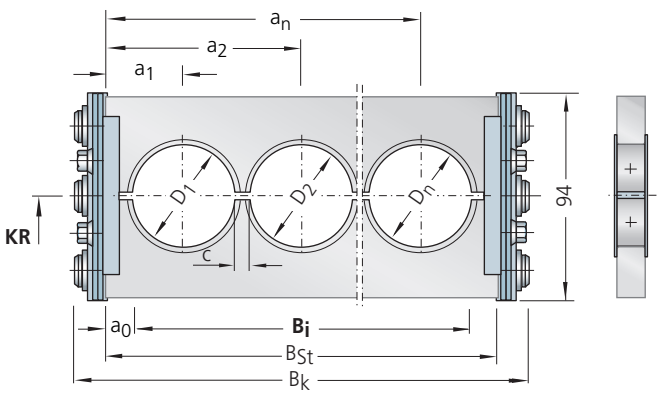

All chain cross sections according to sectional information in the schematic illustration.

Intrinsic chain weight

for two band chains
depending on the chain width.

Hole area of the hole stay is approx. 50 %

Weight of the chain bands:
12 kg/m (excluding stays)

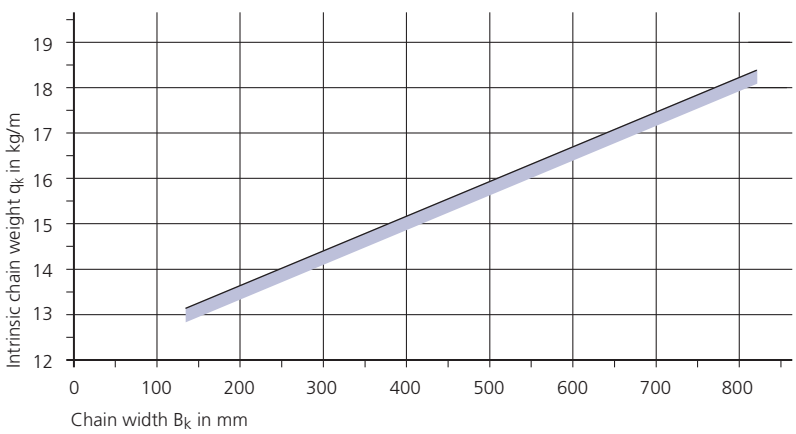

Use our free project planning service.

Subject to change.

Type S 1250 / SX 1250

Stay variant RMD – covered cable carrier, STEEL-TUBE

- **aluminium cover system** for protecting the cables and hoses
- for applications where chips or severe contamination occur
- bolted aluminium cover for maximum stability

Steel band covers are also available as light-weight, economically priced alternatives to covering with the aluminium cover system, see page 166.

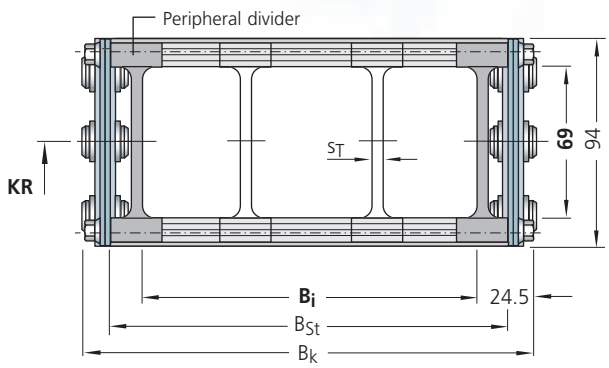

All chain cross sections according to sectional information in the schematic illustration.
The peripheral dividers are an integral part of the stay system and must not be ordered separately.

Chain width:
$B_k = B_i + 49$ mm

$B_{k\ min}$ = 150 mm
$B_{k\ max}$ = 800 mm

Stay width:
$B_{St} = B_i + 25$ mm
$B_{St} = B_k - 24$ mm

Minimum bend radius
KR_{min} = 200 mm

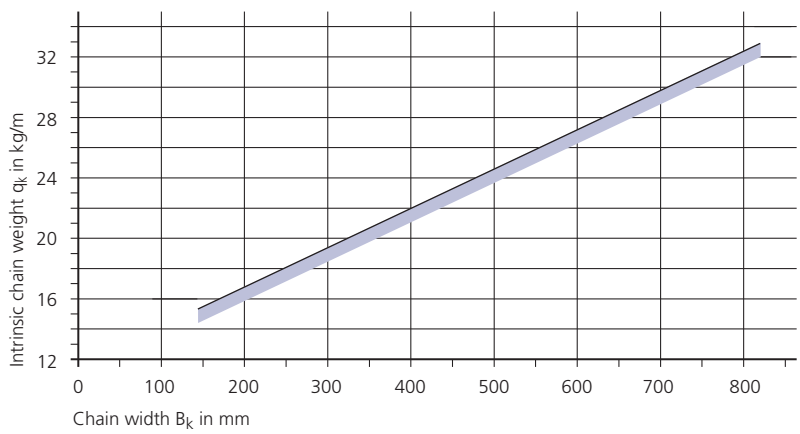

Intrinsic chain weight

for two band chains
depending on the chain width.

Weight of the chain bands:
12 kg/m (excluding stays)

Divider system TS 0 for stay variant RMD

The dividers are **movable**.

s_T	= 5 mm
$a_{T\ min}$	= 17.5 mm
$a_{x\ min}$	= 20 mm

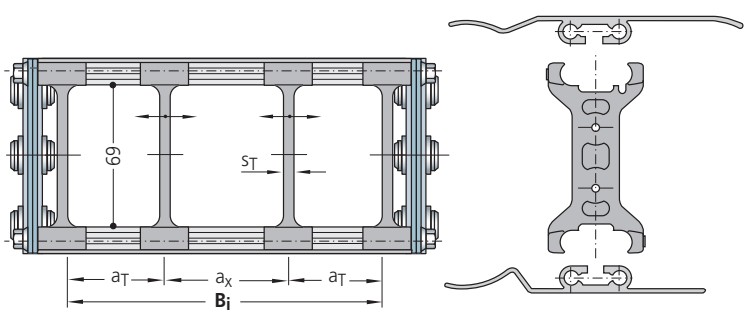

Example for ordering – divider system TS 0

TS 0	/	2
Divider system		Number of dividers n_T

Type S 1250 / SX 1250

Fixed point connection

Connection variant FA

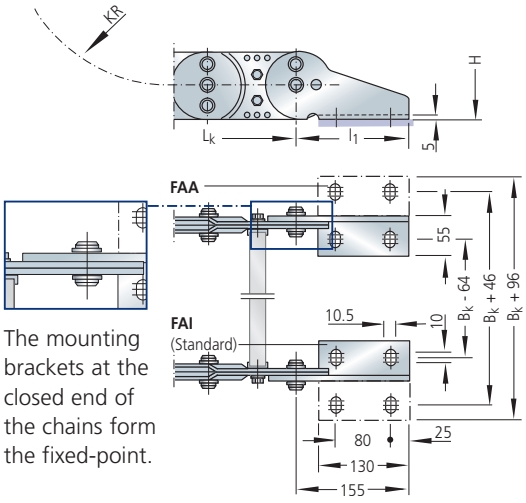

The mounting brackets at the closed end of the chains form the fixed-point.

Connection variant FI

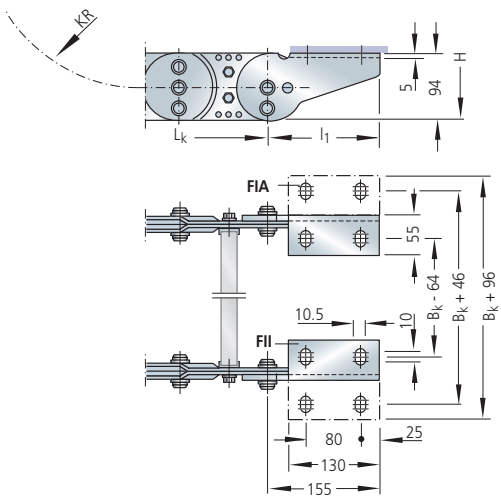

Connection variant FH

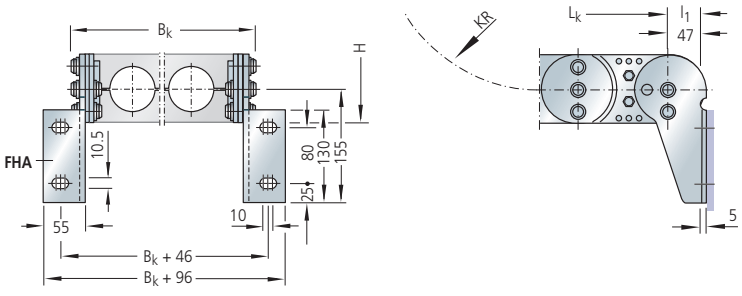

Connection variant FK

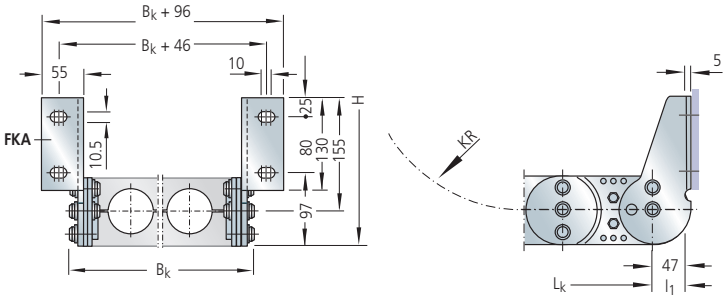

Different connection variants for fixed point and driver are possible according to the drawing information and are realized by different assembly of the connecting pieces.
The connection variants can also be changed at a later date if required.

Please state the desired connection variant according to the ordering key (see page 114).

Use our free project planning service.

Subject to change.

Type S 1250 / SX 1250

Driver connection

Connection variant MA

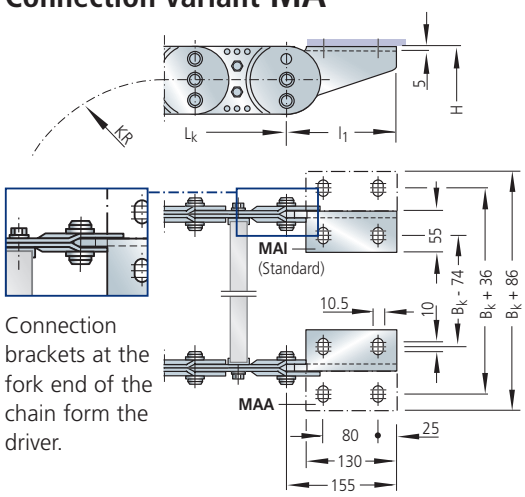

Connection brackets at the fork end of the chain form the driver.

Connection variant MI

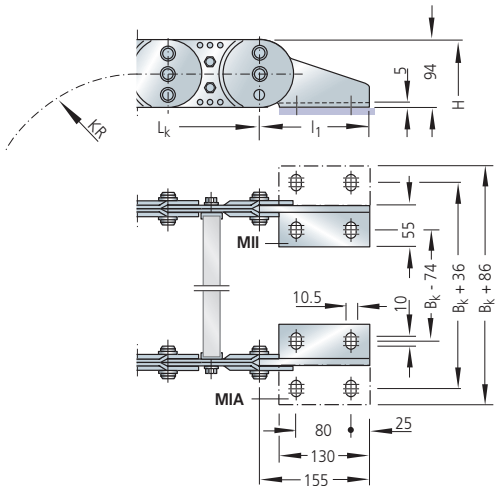

Connection variant MH

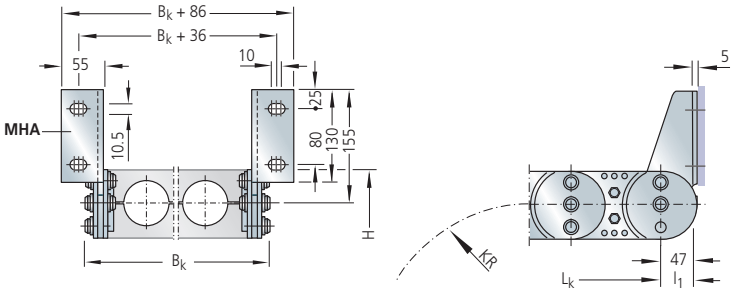

Connection variant MK

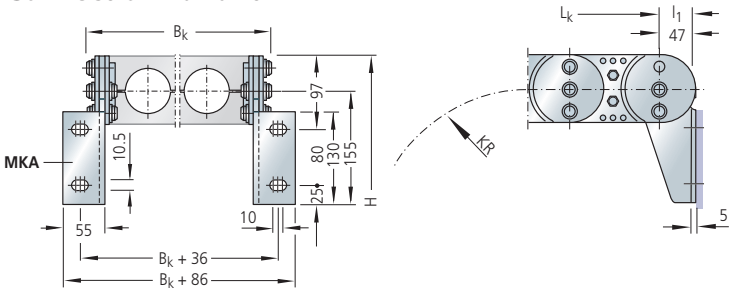

Type S 1250 / SX 1250

Ordering – cable carrier

Cable Carrier

S 1250	.	352	-	RV	-	260	-	St	-	4750
Type		Stay width B_{St} in mm		Stay variant		Bend radius KR in mm		Chain band material		Chain length L_k in mm (without connection)

Chain band materials:

St = zinc-plated steel
ER 1 = stainless steel
ER 1S = sea water resistant stainless steel
ER 2 = high-strength stainless steel

More information:
See material overview on page 50.

Ordering – divider system

Divider system

TS 0	/	4
Divider system		Number of dividers n_T

See also the sample order for the respective divider system.

Ordering – connection

Connection

F	A	A	/	M	A	I
Fixed point	Connection type	Connection surface		Driver	Connection type	Connection surface

If no order designation for the connection is stated, we supply the connection variant **FAI/MAI (Standard)**.

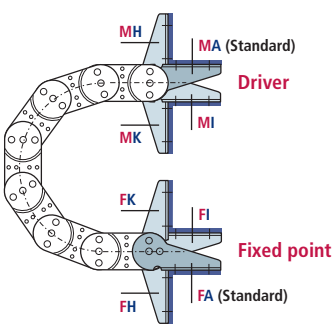

F – Fixed point
M – Driver

Connection type

A – Bolts facing outward **(Standard)**
I – Bolts facing inward
H – Threaded joint, rotated by 90° to the outside
K – Threaded joint, rotated by 90° to the inside

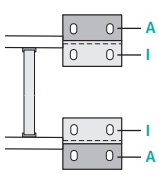

Connection surface

I – Connector surface inside (< B_k)
A – Connector surface outside (> B_k)

The connecting surfaces on the driver and fixed point can be be mounted on the outside or inside according to preference.

The connection type can easily be altered at a later date.

Guide channels
➤ from page 160

Strain relief devices
➤ from page 167

Cables for cable carrier systems
➤ in our LIFE-LINE Safety Cables catalogue.

Use our free project planning service.

Subject to change.

Type **S 1800**

Steel chain bands

Type **SX 1800**

Stainless steel chain bands

2D/3D-Data
www.kabelschlepp.de/cad

Materials

Chain bands and end connectors:
S 1800: Steel, zinc-plated
SX 1800: grade rust and acid resistant **steel**
Standard stay material: aluminium alloy*
Dividers and end pieces: plastic**
➔ see material properties, page 50

STEEL GALVANIZED
STAINLESS STEEL RUST-FREE

Chain width

customer-specific
available in 1 mm width sections

WIDTHSECTIONS 1 mm

Chain pitch

180 mm

Bend radii

various **standard bend radii**
from 265 – 1405 mm; intermediate radii upon request

* See description for the respective stay variant for details.
** Stay variant RR: Dividers of steel.

Also available with straight link plates:
Type S/SX 1852 – please contact us!

Stay variant RM

Clearance height **hi = 108 mm**
➤ **from page 117**

Stay variant RR

Clearance height **hi = 104 mm**
➤ **from page 119**

Stay variant LG

max. **hole Ø = 110 mm**
➤ **from page 120**

Stay variant RMD

Clearance height **hi = 104 mm**
➤ **from page 121**

Type S 1800 / SX 1800

Rolling schematic illustration unsupported arrangement

Chain pitch t = 180 mm

Height h_G = 140 mm

Connection height H = 2 KR + 210 mm

Connection length l_1 = 210/70 mm
(see connection dimensions)

A flat and level surface is required for the cable carrier to extend and retract reliably.
Under certain conditions, a support tray needs to be installed (see page 163).

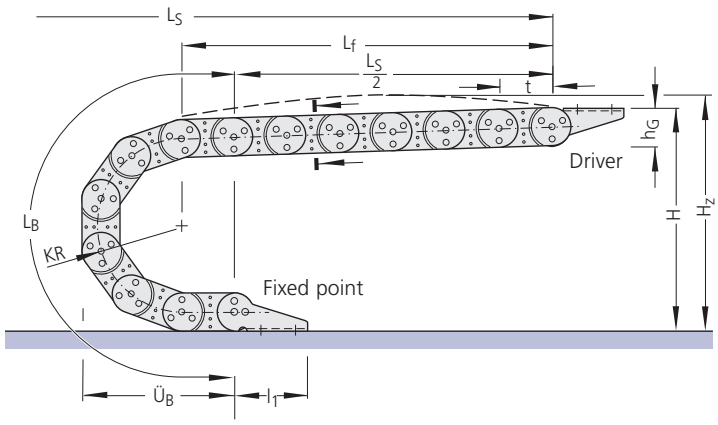

Variable sizes

depending on the bend radius

Dimensions in mm

Bend radius	265	320	375	435	490	605	720	890	1175	1405
Bend length L_B	1552	1725	1898	2087	2259	2620	2982	3516	4411	5164
Bend overhang $Ü_B$	695	750	805	865	920	1035	1150	1320	1605	1835
Height H	740	850	960	1080	1190	1420	1650	1990	2560	3020

Chain length:

$$L_k \approx \frac{L_S}{2} + L_B$$

rounded to pitch 180 mm

Installation height*:

$$H_z = H + z$$

Pre-tension z ≈ 10 mm/m chain length
* required clear height

Load diagramm

Unsupported length L_f and **travel length L_S without support** depending on the additional load (see design guidelines).

Load diagram for an intrinsic chain weight q_k of 26 kg/m.

If the intrinsic chain weight q_k of 26 kg/m is exceeded, the permissible additional load is reduced by the difference.

For circular operations, combinations of KR/RKR are possible. Please contact us for details.

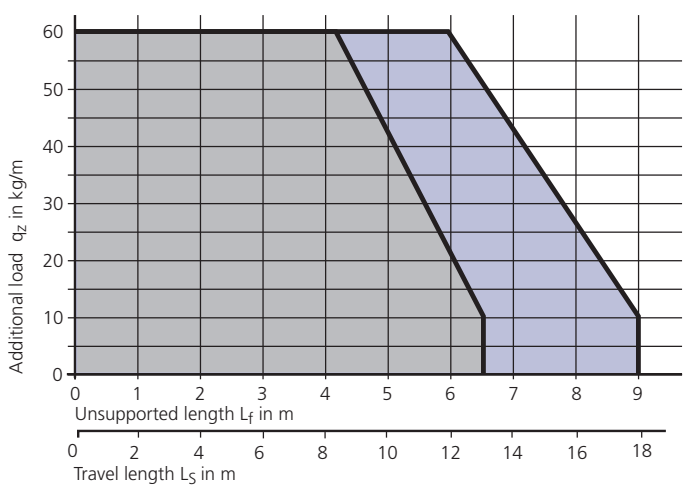

- **S 1800** material **galvanized steel**
- **SX 1800** material **ER 2**
- **SX 1800** material **ER 1 / ER 1S**

Use our free project planning service.

Subject to change.

Type S 1800 / SX 1800

Stay variant RM – frame stay, solid design

- frame stay RM made of aluminium – solid design
- for heavy loads – maximum chain widths possible
- **Standard stay arrangement:** on every 2nd chain link. Stays can be fitted on every chain link, please specify when placing your order.
- bolted stays for maximum stability

Chain width:
$B_k = B_i + 62$ mm

$B_{k\ min}$ = 250 mm
$B_{k\ max}$ = 1000 mm

Stay width:
$B_{St} = B_i + 33$ mm
$B_{St} = B_k - 29$ mm

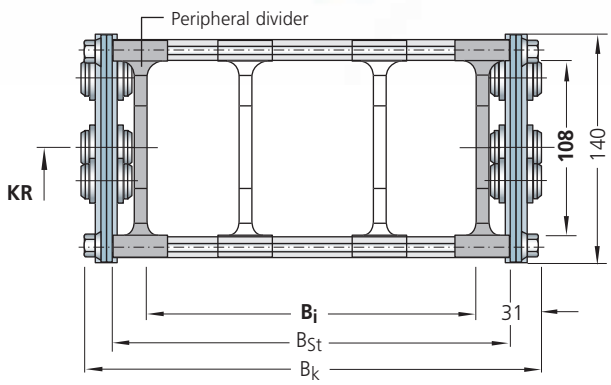

All chain cross sections according to sectional information in the schematic illustration.
The peripheral dividers are an integral part of the stay system and must not be ordered separately.

Intrinsic chain weight

for two band chains
depending on the chain width.

Weight of the chain bands:
22.8 kg/m (excluding stays)

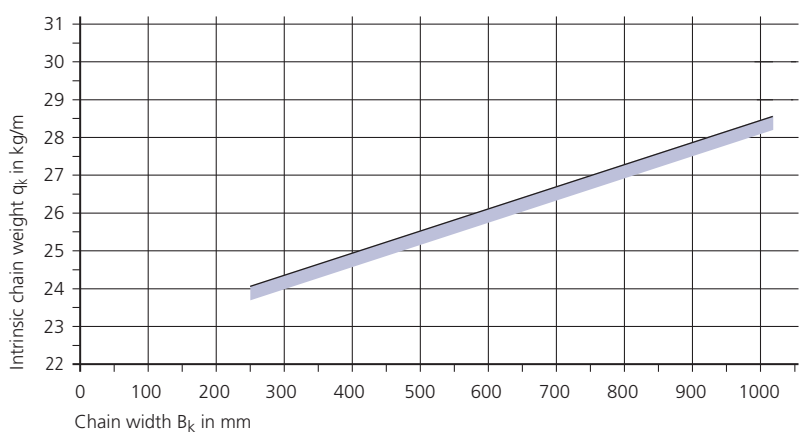

Divider system TS 0 for stay variant RM

The dividers are **movable**.

s_T	= 7.5 mm
$a_{T\ min}$	= 21.5 mm
$a_{x\ min}$	= 25 mm

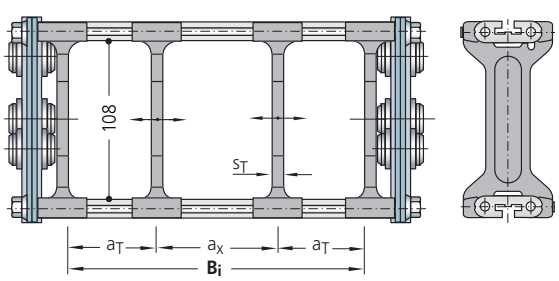

Example for ordering – divider system TS 0

TS 0	/	2
Divider system		Number of dividers n_T

Type S 1800 / SX 1800

Stay variant RM – frame stay, reinforced design

Divider system TS 3 for stay variant RM:
Section subdivision with partitions made of plastic or aluminium

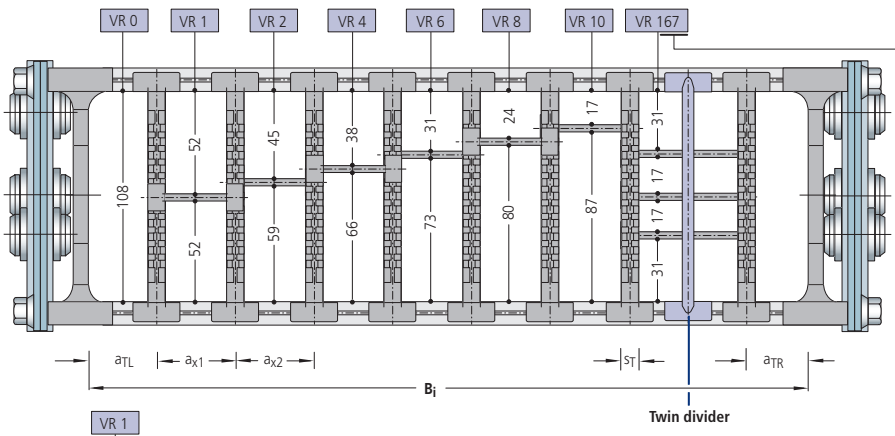

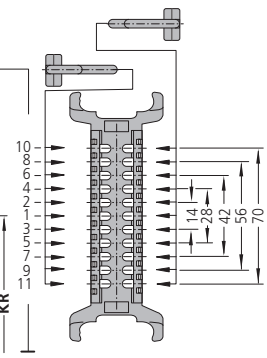

Position of the subdivision(s) in the divider

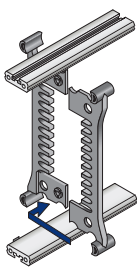

Assembly of twin divider

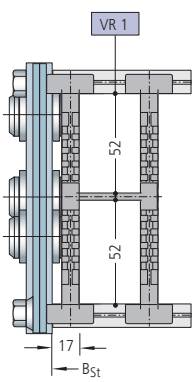

The dividers are fixed by the partitions, the complete divider system is movable.
Optional movable **twin dividers (s_T = 5 mm)** are available.
Twin dividers can also be assembled at a later date.

Dimensions without VR 0 chamber at the edge.
The outer dividers replace the peripheral dividers.

s_T	= 8 mm
$a_{T\ min}$	= 1 mm
$a_{x\ min}$	= see partitions dimensions
$n_{T\ min}$	= 2

Example for ordering – divider system TS 3
with partitions made of plastic

TS 2	-	K 1	-	VR 0	/	34
	-	K 2	-	VR 1	/	38
Divider system		Chamber		Variant of the height subdivision in chamber		Installation interval (mm)

Please state the chambers from left to right and the dimensions a_T/a_x when ordering. Possibly enclose a sketch with dimensions.

Please state additional twin dividers when ordering.

Dimensions of the partitions for TS 3

Partitions made of plastic (Standard)

Dimensions in mm

a_x (Center to center distance, dividers)									
16	18	23	28	32	33	38	43	48	58
64	68	78	80	88	96	112	**128**	**144**	**160**
176	**192**	**208**							

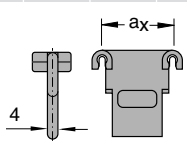

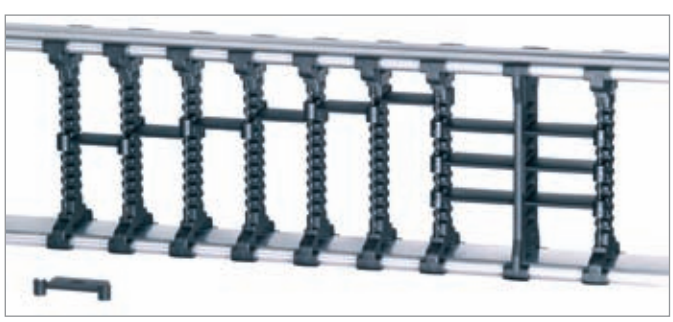

When using **partitions with a_x > 112 mm**, there must be an additional central support with a **twin divider**. Twin dividers are suitable for subsequent installation in the partition system.

Alternatively, partitions made of aluminium in 1 mm section widths **($a_{x\ min}$ = 42 mm)** are also available.

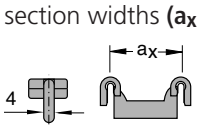

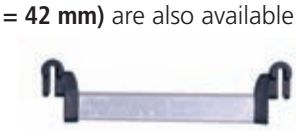

Use our free project planning service.

Subject to change.

Type S 1800 / SX 1800

Stay variant RR – frame stay, tube design

- gentle cable support due to rotating metal tubes
- ideal when using media hoses with "soft" sheaths
- possible materials of the axles, tubes and dividers:
  - axles, tubes and dividers made of galvanized steel **(Standard)**
  - axles, tubes and dividers made of stainless steel ER 1, ER 1S
- **Standard stay arrangement:** on every 2nd chain link. Stays can be fitted on every chain link, please specify when placing your order.
- bolted stays for maximum stability

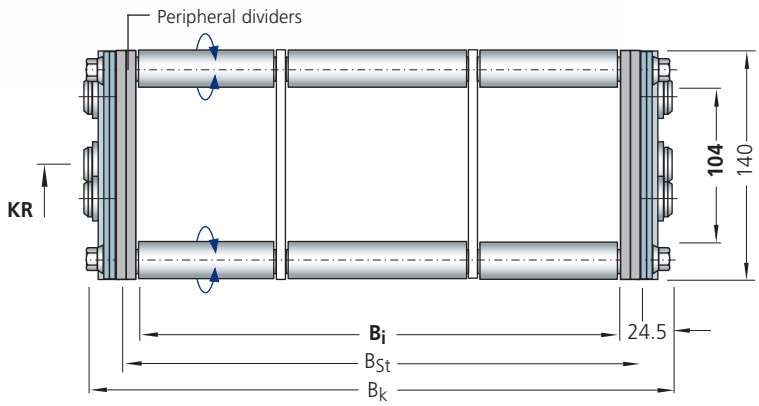

All chain cross sections according to sectional information in the schematic illustration.
The peripheral dividers are an integral part of the stay system and must not be ordered separately.

Chain width:
$B_k = B_i + 49$ mm

$B_{k\ min}$ = 250 mm
$B_{k\ max}$ = 800 mm

Stay width:
$B_{St} = B_i + 20$ mm
$B_{St} = B_k - 29$ mm

Intrinsic chain weight

for two band chains
depending on the chain width.

Weight of the chain bands:
22.8 kg/m (excluding stays)

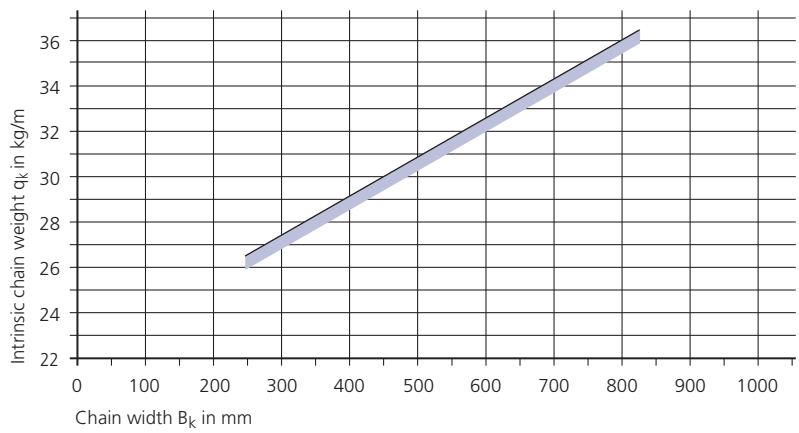

Divider systems TS 0 and TS 1 for stay variant RR

The dividers are **fixed**.

TS 0: without height subdivision
TS 1: with continuous centric height subdivision

s_T	= 5 mm
$a_{T\ min}$	= 45 mm
$a_{x\ min}$	= 45 mm

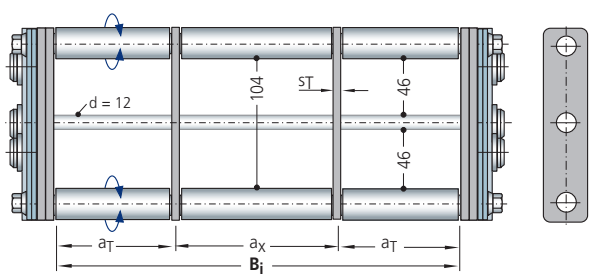

Example for ordering – divider system

TS 0	/	2
Divider system		Number of dividers n_T

Please state the dimensions a_T/a_x when ordering. Possibly enclose a sketch with dimensions.

Type S 1800 / SX 1800

Stay variant LG – hole stay made of aluminium, split design

- optimum cable guidance in the neutral bending line is possible
- drilling pattern individually adapted to the application
- high stability due to solid construction
- split design as standard for easy laying of the cables
- **Standard stay arrangement:** on every 2nd chain link. Stays can be fitted on every chain link, please specify when placing your order.
- bolted stays for maximum stability – also available not split

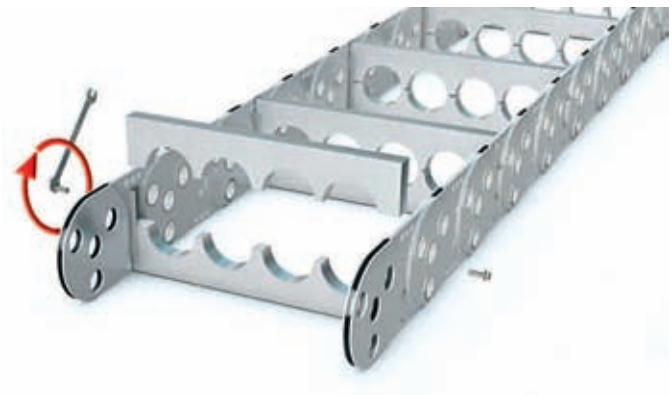

Chain width:

$B_k = \Sigma D + \Sigma c + 59$ mm

$B_{k\,min}$ = 180 mm
$B_{k\,max}$ = 1000 mm

Stay width:

$B_{St} = \Sigma D + \Sigma c + 27$ mm

$B_i = B_{St} - 2\,a_0$

$B_{St} = B_k - 32$ mm

D_{max} = 110 mm
c_{min} = 4 mm
$a_{0\,min}$ = 13.5 mm

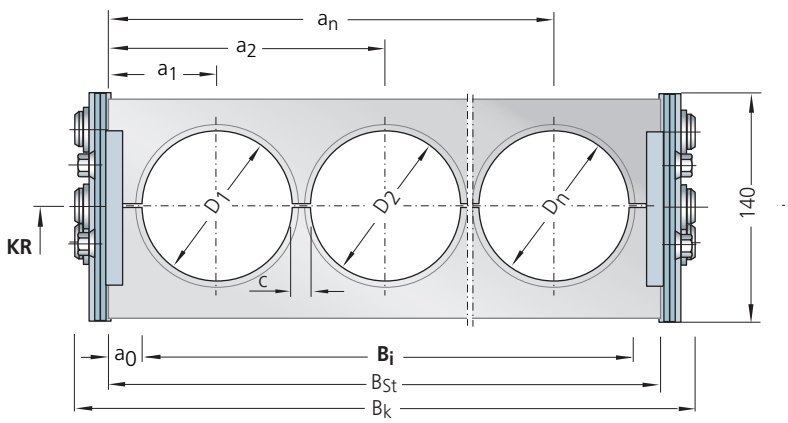

All chain cross sections according to sectional information in the schematic illustration.

Intrinsic chain weight

for two band chains
depending on the chain width.

Hole area of the hole stay is approx. 50 %

Weight of the chain bands:
22.8 kg/m (excluding stays)

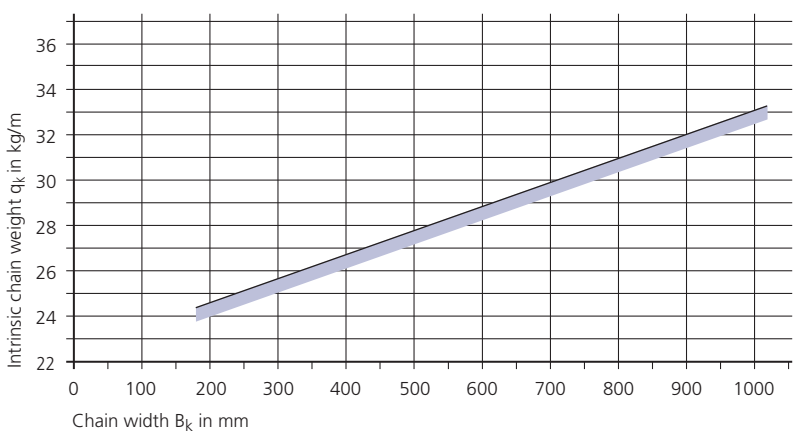

Use our free project planning service.

Subject to change.

Type S 1800 / SX 1800

Stay variant RMD – covered cable carrier, STEEL-TUBE

- **aluminium cover system** for protecting the cables and hoses
- for applications where chips or severe contamination occur
- bolted aluminium cover for maximum stability

Steel band covers are also available as light-weight, economically priced alternatives to covering with the aluminium cover system, see page 166.

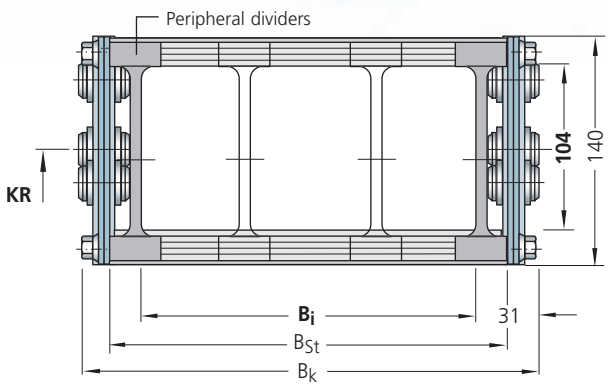

All chain cross sections according to sectional information in the schematic illustration.
The peripheral dividers are an integral part of the stay system and must not be ordered separately.

Chain width:
$B_k = B_i + 62$ mm

$B_{k\ min}$ = 250 mm
$B_{k\ max}$ = 1000 mm

Stay width:
$B_{St} = B_i + 33$ mm
$B_{St} = B_k - 29$ mm

Minimum bend radius
KR_{min} = 320 mm

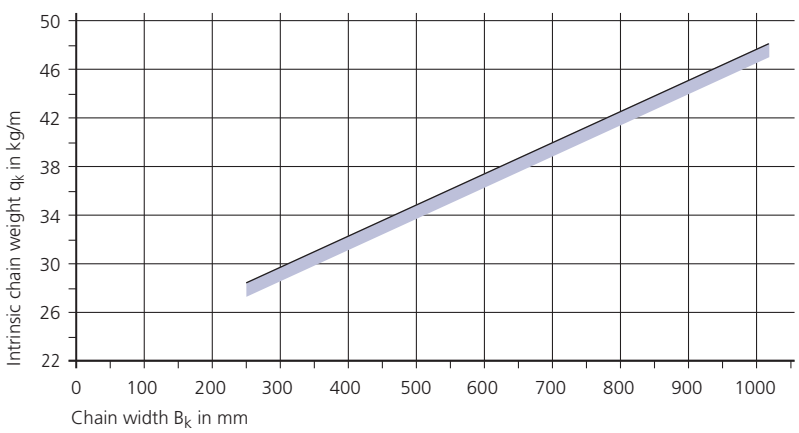

Intrinsic chain weight

for two band chains
depending on the chain width.

Weight of the chain bands:
22.8 kg/m (excluding stays)

Divider system TS 0 for stay variant RMD

The dividers are **movable**.

s_T	= 7.5 mm
$a_{T\ min}$	= 21.5 mm
$a_{x\ min}$	= 25 mm

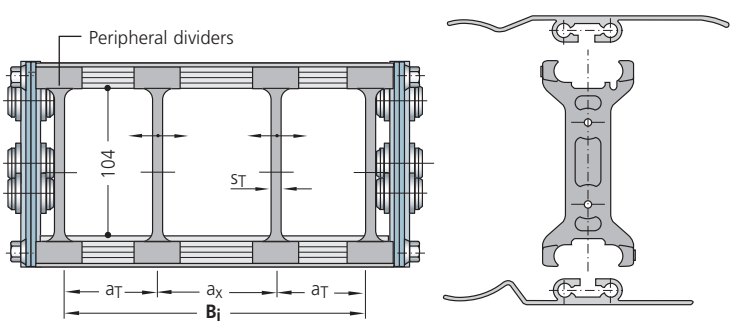

Example for ordering – divider system TS 0

TS 0	/	2
Divider system		Number of dividers n_T

Type S 1800 / SX 1800

Fixed point connection

Connection variant FA

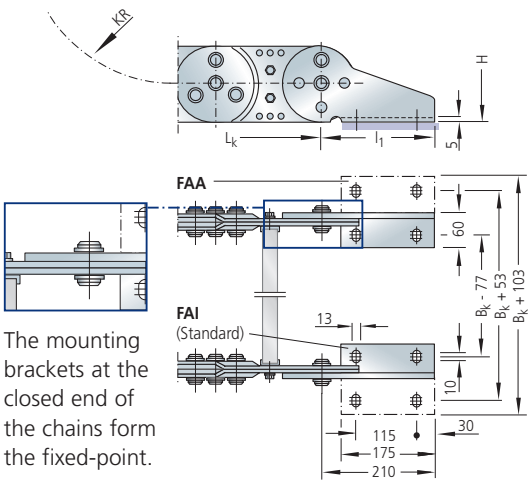

The mounting brackets at the closed end of the chains form the fixed-point.

Connection variant FI

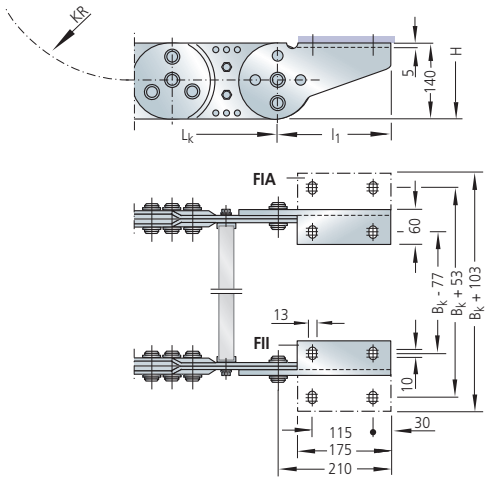

Connection variant FH

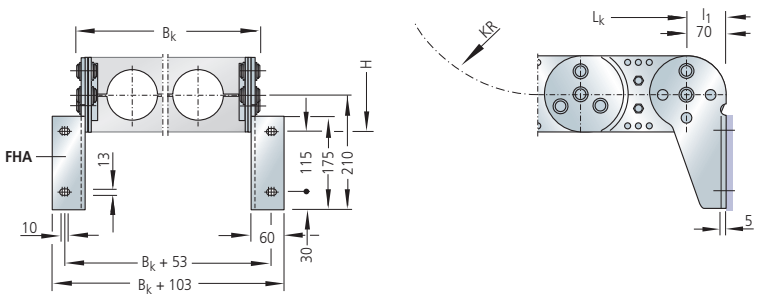

Connection variant FK

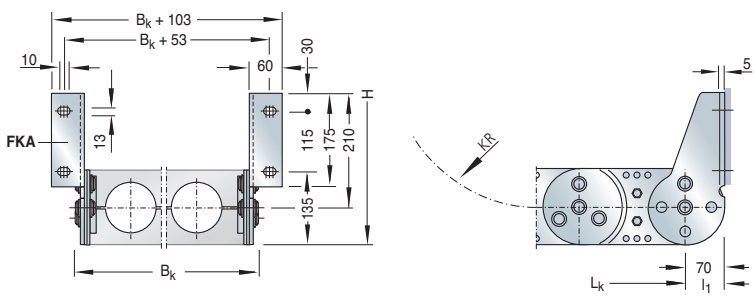

Different connection variants for fixed point and driver are possible according to the drawing information and are realized by different assembly of the connecting pieces.
The connection variants can also be changed at a later date if required.

Please state the desired connection variant according to the ordering key (see page 124).

Use our free project planning service.

Subject to change.

Type S 1800 / SX 1800

Driver connection

Connection variant MA

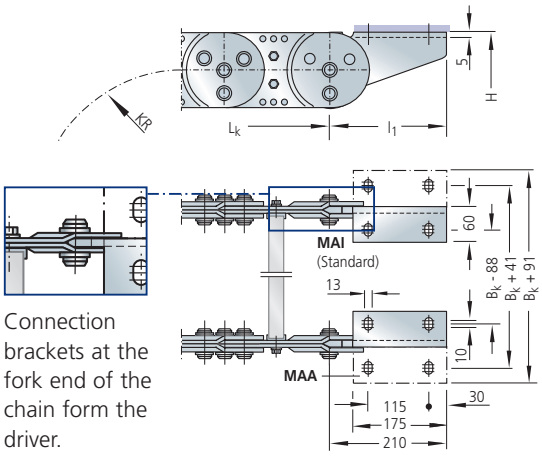

Connection brackets at the fork end of the chain form the driver.

Connection variant MI

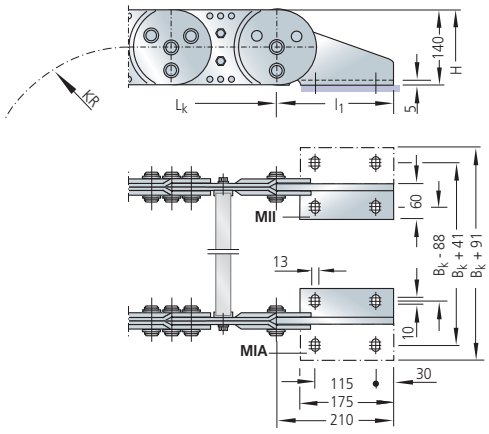

Connection variant MH

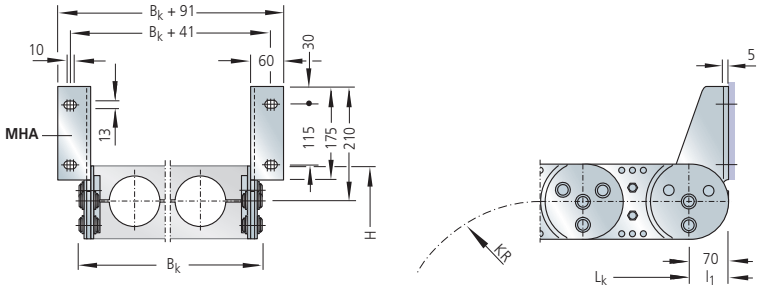

Connection variant MK

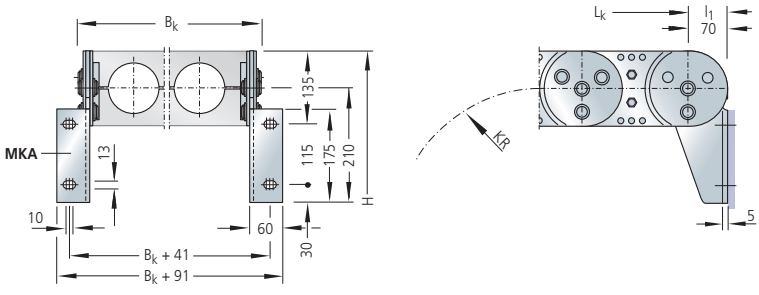

Type S 1800 / SX 1800

Ordering – cable carrier

Cable Carrier

S 1800	.	450	-	RM	-	375	-	St	-	5940
Type		Stay width B_{St} in mm		Stay variant		Bend radius KR in mm		Chain band material		Chain length L_k in mm (without connection)

Chain band materials:

St = zinc-plated steel
ER 1 = stainless steel
ER 1S = sea water resistant stainless steel
ER 2 = high-strength stainless steel

More information:
See material overview on page 50.

Ordering – divider system

Divider system

TS 0	/	4
Divider system		Number of dividers n_T

See also the sample order for the respective divider system.

Ordering – connection

Connection

F	A	A	/	M	K	A
Fixed point	Connection type	Connection surface		Driver	Connection type	Connection surface

If no order designation for the connection is stated, we supply the connection variant **FAI/MAI (Standard)**.

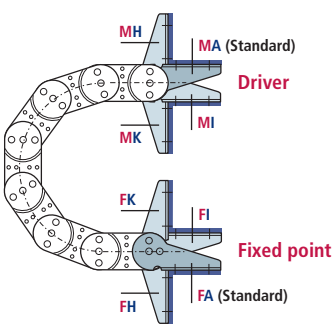

F – Fixed point
M – Driver

Connection type

A – Bolts facing outward **(Standard)**
I – Bolts facing inward
H – Threaded joint, rotated by 90° to the outside
K – Threaded joint, rotated by 90° to the inside

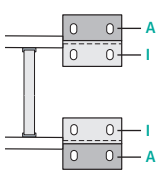

Connection surface

I – Connector surface inside (< B_k)
A – Connector surface outside (> B_k)

The connecting surfaces on the driver and fixed point can be be mounted on the outside or inside according to preference.

The connection type can easily be altered at a later date.

Guide channels
➤ from page 160

Strain relief devices
➤ from page 167

Cables for cable carrier systems
➤ in our LIFE-LINE Safety Cables catalogue.

Use our free project planning service.

Subject to change.

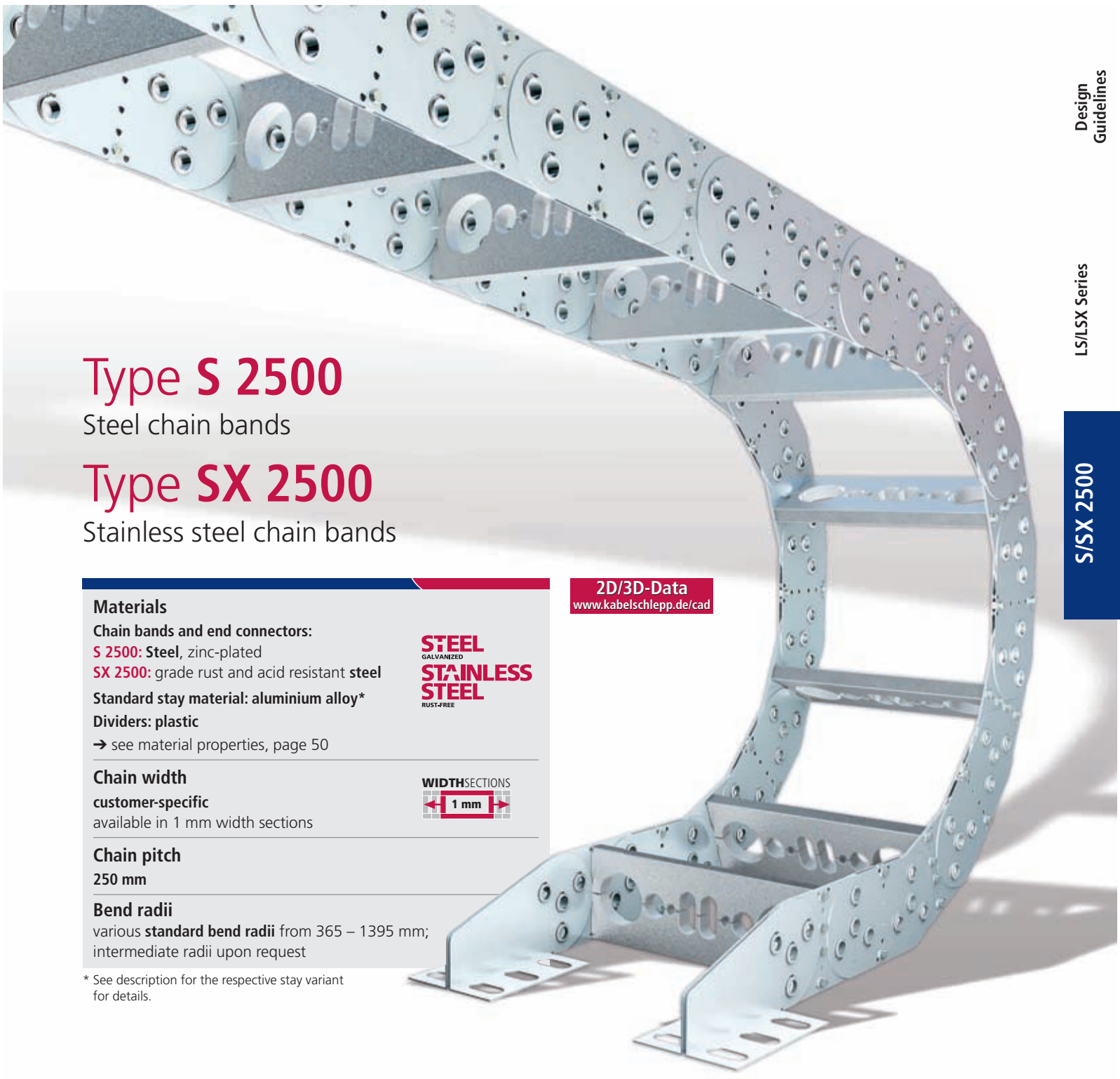

Type **S 2500**

Steel chain bands

Type **SX 2500**

Stainless steel chain bands

2D/3D-Data
www.kabelschlepp.de/cad

Materials

Chain bands and end connectors:
S 2500: Steel, zinc-plated
SX 2500: grade rust and acid resistant **steel**
Standard stay material: aluminium alloy*
Dividers: plastic
➔ see material properties, page 50

STEEL GALVANIZED
STAINLESS STEEL RUST-FREE

Chain width

customer-specific
available in 1 mm width sections

WIDTHSECTIONS 1 mm

Chain pitch

250 mm

Bend radii

various **standard bend radii** from 365 – 1395 mm;
intermediate radii upon request

* See description for the respective stay variant for details.

Stay variant RM

Clearance height **h_i = 183 mm**
➤ **from page 127**

Stay variant LG

max. **hole Ø = 180 mm**
➤ **from page 128**

Stay variant RR is possible as a special design. Please contact us.

Type S 2500 / SX 2500

Rolling schematic illustration unsupported arrangement

Chain pitch t = 250 mm

Height h_G = 220 mm

Connection height H = 2 KR + 330 mm

Connection length l_1 = 300 mm
(see connection dimensions)

A flat and level surface is required for the cable carrier to extend and retract reliably.
Under certain conditions, a support tray needs to be installed (see page 163).

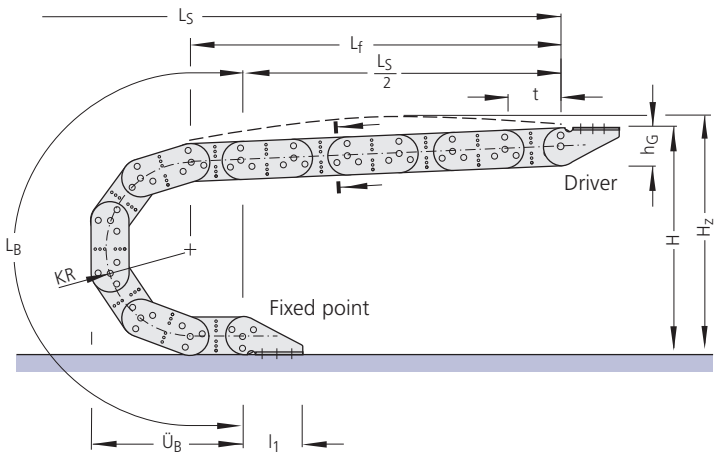

Variable sizes

depending on the bend radius

Dimensions in mm

Bend radius	365	445	600	760	920	1075	1235	1395
Bend length L_B	2147	2398	2885	3388	3890	4377	4880	5383
Bend overhang $Ü_B$	975	1055	1210	1370	1530	1685	1845	2005
Height H	1060	1220	1530	1850	2170	2480	2800	3120

Chain length:

$$L_k \approx \frac{L_S}{2} + L_B$$

rounded to pitch 250 mm

Installation height*:

$$H_Z = H + z$$

Pre-tension z ≈ 10 mm/m chain length
* required clear height

Load diagramm

Unsupported length L_f and
travel length L_S without support
depending on the additional load
(see design guidelines).

Load diagram for an intrinsic chain weight q_k of 41 kg/m.

If the intrinsic chain weight q_k of 41 kg/m is exceeded, the permissible additional load is reduced by the difference.

For circular operations, combinations of KR/RKR are possible.
Please contact us for details.

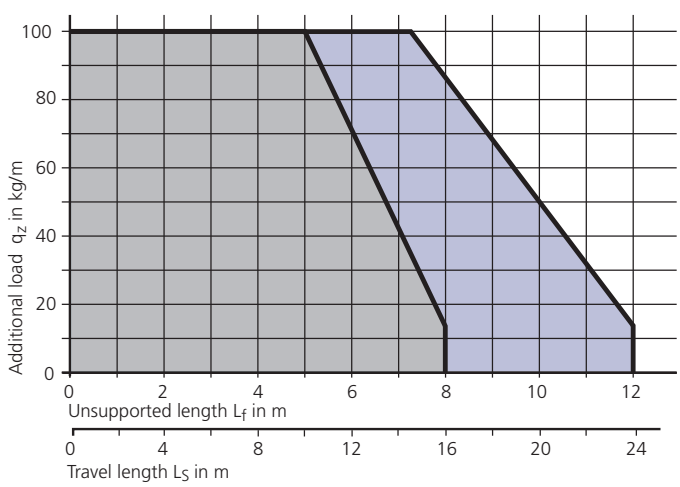

- **S 2500** material **galvanized steel**
- **SX 2500** material **ER 2**
- **SX 2500** material **ER 1 / ER 1S**

Use our free project planning service.

Subject to change.

Type S 2500 / SX 2500

Stay variant RM – frame stay, solid design

- frame stay RM made of aluminium – solid design
- for heavy loads – maximum chain widths possible
- **Standard stay arrangement:** on every 2nd chain link. Stays can be fitted on every chain link, please specify when placing your order.
- bolted stays for maximum stability

Chain width:
$B_k = B_i + 75$ mm

$B_{k\,min}$ = 250 mm
$B_{k\,max}$ = 1200 mm

Stay width:
$B_{St} = B_i + 43$ mm
$B_{St} = B_k - 32$ mm

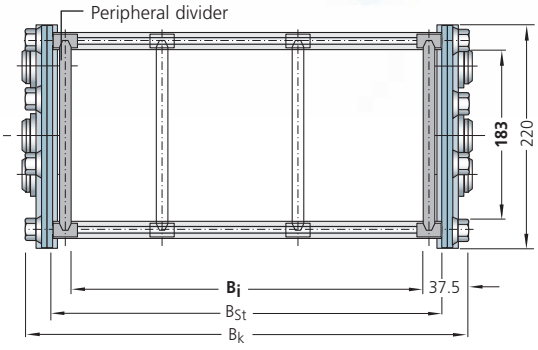

All chain cross sections according to sectional information in the schematic illustration.

Intrinsic chain weight

for two band chains
depending on the chain width.

Weight of the chain bands:
36 kg/m (excluding stays)

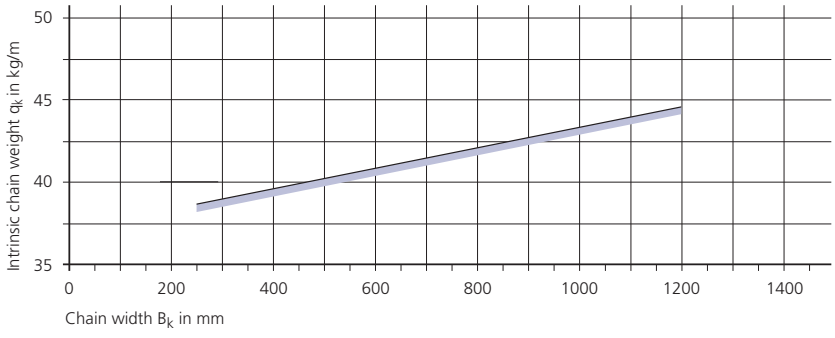

Divider system TS 0 for stay variant RM

The dividers are **movable**.

s_T	= 12 mm
$a_{T\,min}$	= 19 mm
$a_{x\,min}$	= 25 mm

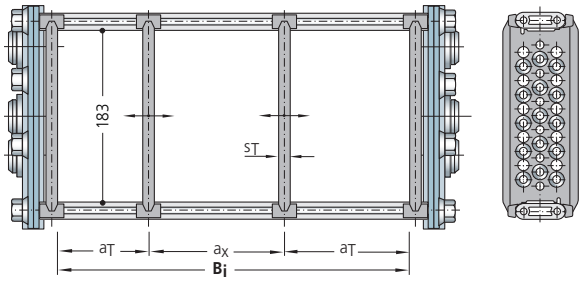

Example for ordering – divider system TS 0

TS 0	/	2
Divider system		Number of dividers n_T

Divider systems TS 1 and TS 2 for stay variant RM

Divider systems TS 1 and TS 2 are available on request.

Please contact us.

Type S 2500 / SX 2500

Stay variant LG – hole stay made of aluminium, split design

- optimum cable guidance in the neutral bending line is possible
- drilling pattern individually adapted to the application
- high stability due to solid construction
- split design as standard for easy laying of the cables
- **Standard stay arrangement:**
  on every 2nd chain link.
  Stays can be fitted on every chain link, please specify when placing your order.
- bolted stays for maximum stability

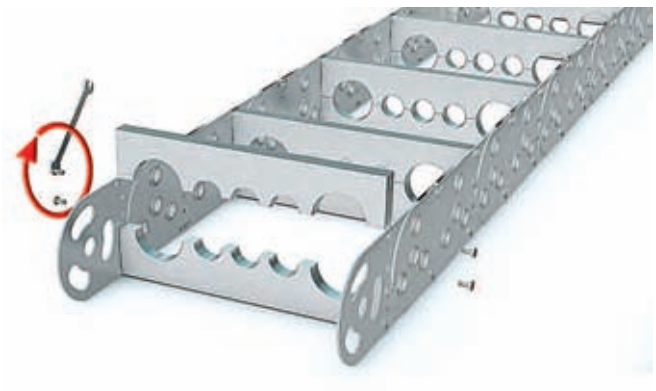

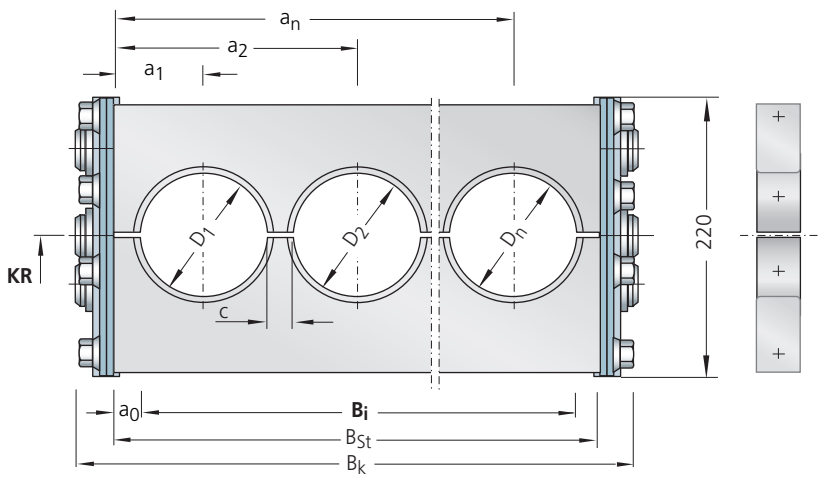

All chain cross sections according to sectional information in the schematic illustration.

Chain width:

$B_k = \Sigma D + \Sigma c + 76$ mm

$B_{k\,min}$ = 250 mm
$B_{k\,max}$ = 1200 mm

Stay width:

$B_{St} = \Sigma D + \Sigma c + 44$ mm

$B_i = B_{St} - 2\,a_0$

$B_{St} = B_k - 32$ mm

D_{max} = 180 mm
c_{min} = 4 mm
$a_{0\,min}$ = 22 mm

Intrinsic chain weight

for two band chains
depending on the chain width.

Hole area of the hole stay is approx. 50 %

Weight of the chain bands:
36 kg/m (excluding stays)

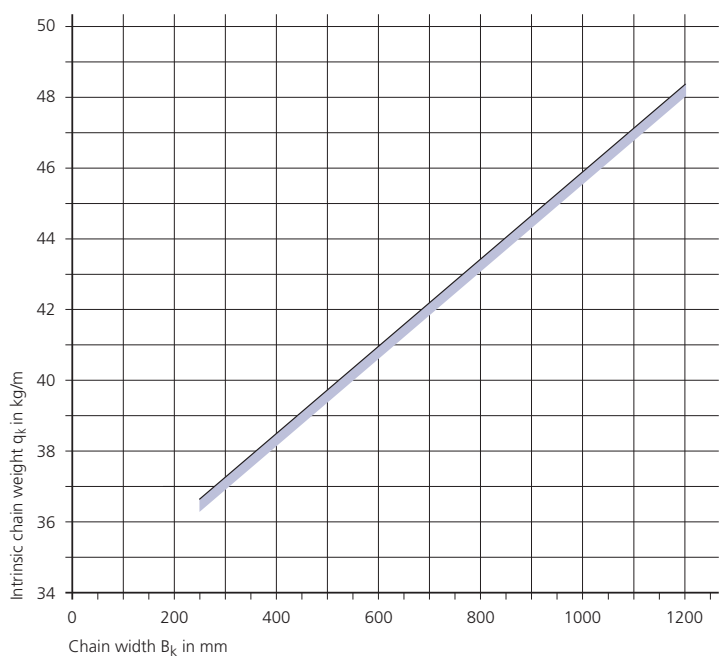

Use our free project planning service.

Subject to change.

Type S 2500 / SX 2500

Fixed point connection

Connection variant FA

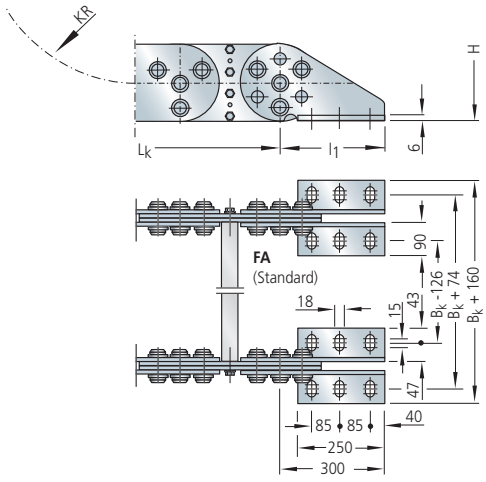

Connection variant FI

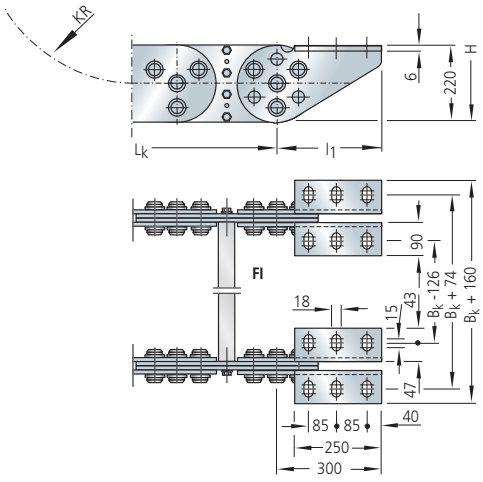

Driver connection

Connection variant MA

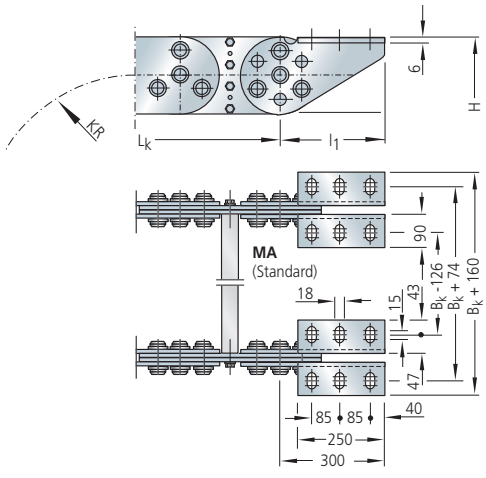

Connection variant MI

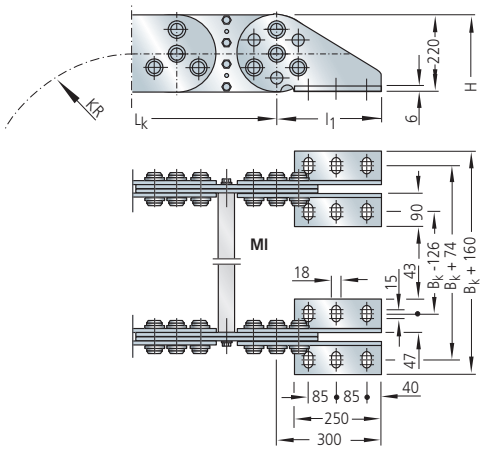

Driver and fixed point connection using double end connectors on the inside link plates.

Different connection variants for fixed point and driver are possible according to the drawing information and are realized by different assembly of the connecting pieces.
The connection variants can also be changed at a later date if required.

Please state the desired connection variant according to the ordering key (see page 130).

Type S 2500 / SX 2500

Ordering – cable carrier

Cable Carrier

S 2500	.	850	-	LG	-	760	-	ER 1	-	9250
Type		Stay width B_{St} in mm		Stay variant		Bend radius KR in mm		Chain band material		Chain length L_k in mm (without connection)

Chain band materials:

St = zinc-plated steel
ER 1 = stainless steel
ER 1S = sea water resistant stainless steel
ER 2 = high-strength stainless steel

More information:
See material overview on page 50.

Ordering – divider system

Divider system

TS 0	/	4
Divider system		Number of dividers n_T

See also the sample order for the respective divider system.

Ordering – connection

Connection

F	I	/	M	A
Fixed point	Connection type		Driver	Connection type

If no order designation for the connection is stated, we supply the connection variant **FAI/MAI (Standard)**.

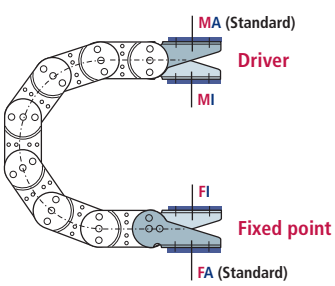

F – Fixed point
M – Driver

Connection type
A – Bolts facing outward **(Standard)**
I – Bolts facing inward

Guide channels
➤ **from page 160**

Strain relief devices
➤ **from page 167**

Cables for cable carrier systems
➤ **in our LIFE-LINE Safety Cables catalogue.**

Use our free project planning service.

Subject to change.

Type **S 3200**

Steel chain bands

Type **SX 3200**

Stainless steel chain bands

2D/3D-Data
www.kabelschlepp.de/cad

Materials

Chain bands and end connectors:
S 3200: Steel, zinc-plated
SX 3200: grade rust and acid resistant **steel**
Standard stay material: aluminium alloy
➔ see material properties, page 50

STEEL GALVANIZED
STAINLESS STEEL RUST-FREE

Chain width

customer-specific
available in 1 mm width sections

WIDTHSECTIONS 1 mm

Chain pitch

320 mm

Bend radii

various **standard bend radii**
from 470 – 1785 mm;
intermediate radii upon request

Stay variant LG

max. **hole Ø = 220 mm**
➤ **from page 133**

Stay variant RR is possible as a special design.
Please contact us.

Type S 3200 / SX 3200

Rolling schematic illustration unsupported arrangement

Chain pitch t = 320 mm

Height h_G = 300 mm

Connection height H = 2 KR + 450 mm

Connection length l_1 = 350 mm
(see connection dimensions)

A flat and level surface is required for the cable carrier to extend and retract reliably.
Under certain conditions, a support tray needs to be installed (see page 163).

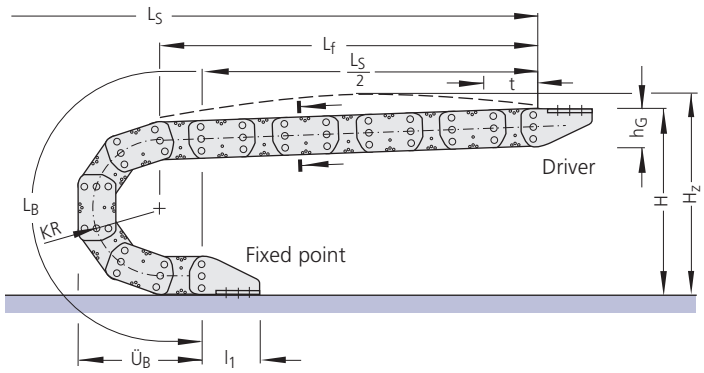

Variable sizes

depending on the bend radius

Dimensions in mm

Bend radius	470	670	870	1075	1275	1480	1785
Bend length L_B	2757	3385	4013	4657	5286	5930	6888
Bend overhang $Ü_B$	1260	1460	1660	1865	2065	2270	2575
Height H	1390	1790	2190	2600	3000	3410	4020

Chain length:

$$L_k \approx \frac{L_S}{2} + L_B$$

rounded to pitch 320 mm

Installation height*:

$$H_Z = H + z$$

Pre-tension z ≈ 10 mm/m chain length
* required clear height

Load diagramm

Unsupported length L_f and
travel length L_S without support
depending on the additional load
(see design guidelines).

Load diagram for an intrinsic chain weight q_k of 62 kg/m.

If the intrinsic chain weight q_k of 62 kg/m is exceeded, the permissible additional load is reduced by the difference.

For circular operations, combinations of KR/RKR are possible.
Please contact us for details.

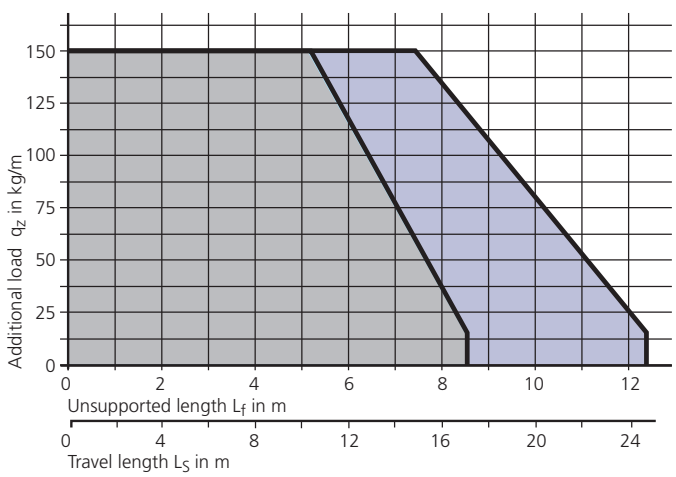

- **S 3200** material **galvanized steel**
- **SX 3200** material **ER 2**
- **SX 3200** material **ER 1 / ER 1S**

Use our free project planning service.

Subject to change.

Type S 3200 / SX 3200

Stay variant LG – hole stay made of aluminium, split design

- optimum cable guidance in the neutral bending line is possible
- drilling pattern individually adapted to the application
- high stability due to solid construction
- split design as standard for easy laying of the cables
- **Standard stay arrangement:** on every 2nd chain link. Stays can be fitted on every chain link, please specify when placing your order.
- bolted stays for maximum stability

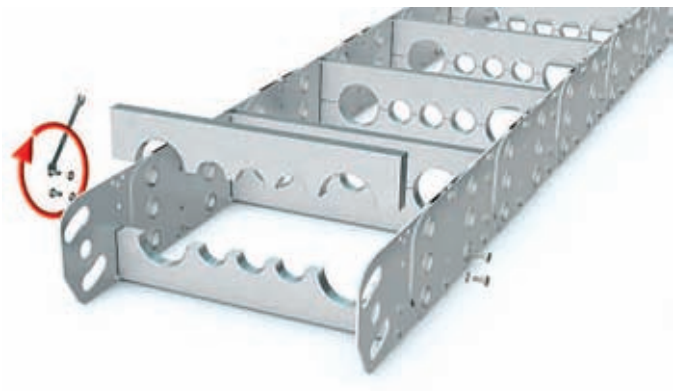

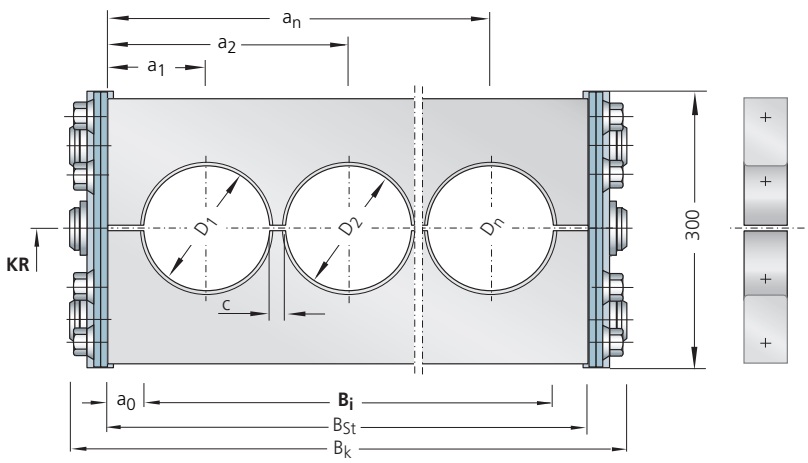

All chain cross sections according to sectional information in the schematic illustration.

Chain width:

$B_k = \Sigma D + \Sigma c + 84$ mm

$B_{k\,min}$ = 250 mm
$B_{k\,max}$ = 1500 mm

Stay width:

$B_{St} = \Sigma D + \Sigma c + 44$ mm

$B_i = B_{St} - 2\,a_0$

$B_{St} = B_k - 40$ mm

D_{max} = 220 mm
c_{min} = 4 mm
$a_{0\,min}$ = 22 mm

Intrinsic chain weight

for two band chains
depending on the chain width.

Hole area of the hole stay is approx. 50 %

Weight of the chain bands:
55 kg/m (excluding stays)

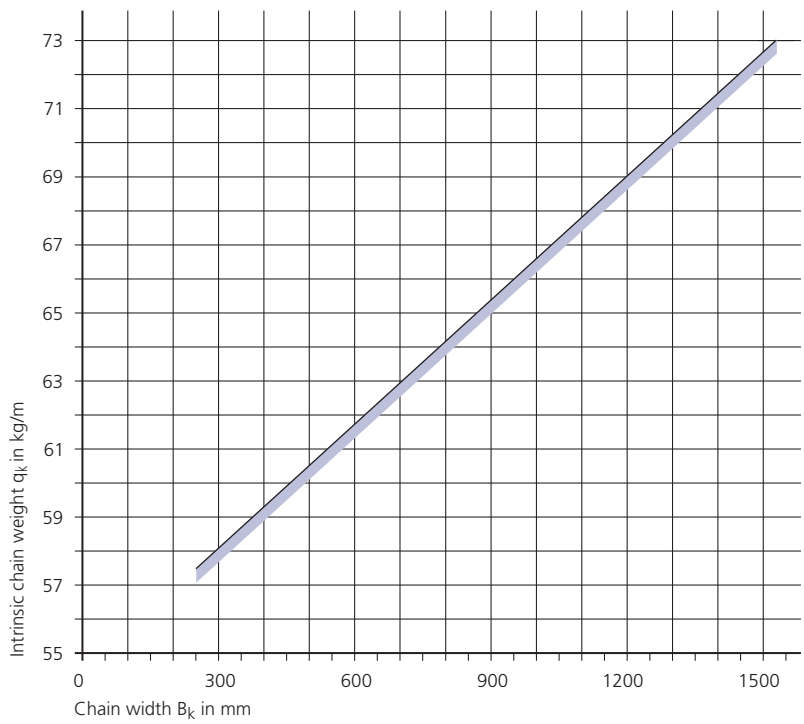

Type S 3200 / SX 3200

Fixed point connection

Connection variant FA

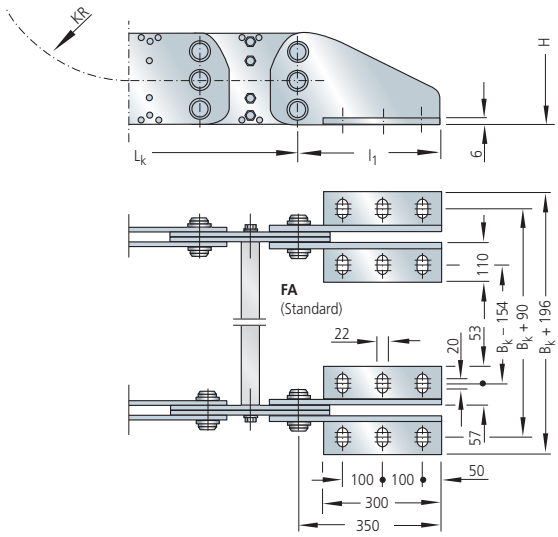

Connection variant FI

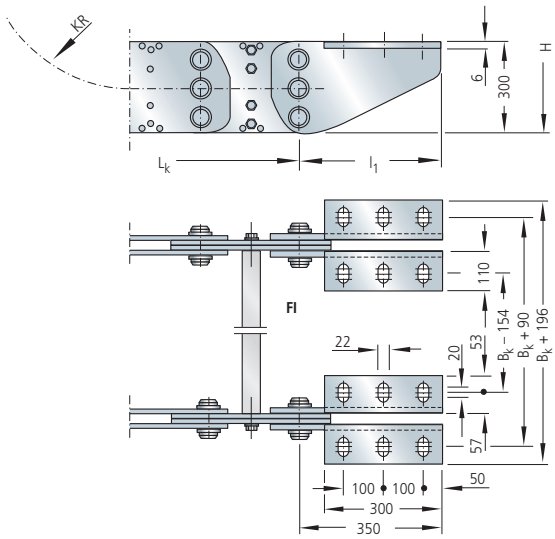

Driver connection

Connection variant MA

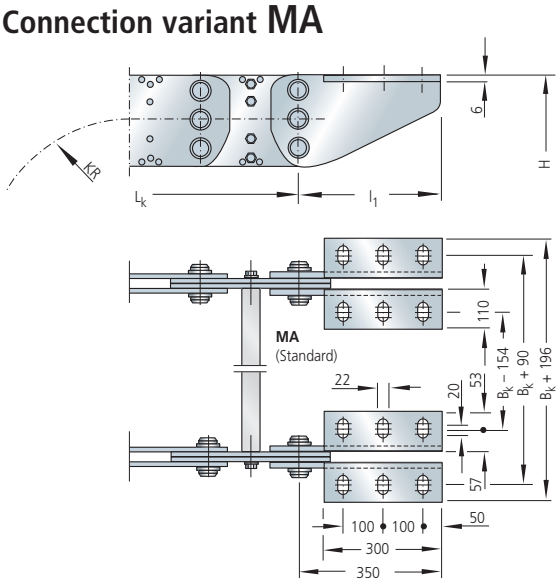

Connection variant MI

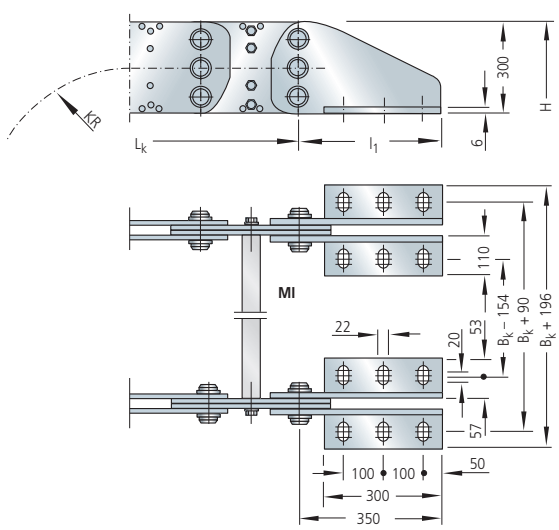

Driver and fixed point connection using double end connectors on the inside link plates.

Different connection variants for fixed point and driver are possible according to the drawing information and are realized by different assembly of the connecting pieces.
The connection variants can also be changed at a later date if required.

Please state the desired connection variant according to the ordering key (see page 135).

Use our free project planning service.

Subject to change.

Type S 3200 / SX 3200

Ordering – cable carrier

Cable Carrier

S 3200	.	820	-	LG	-	1075	-	ER 1	-	9280
Type		Stay width B_{St} in mm		Stay variant		Bend radius KR in mm		Chain band material		Chain length L_k in mm (without connection)

Chain band materials:

St = zinc-plated steel
ER 1 = stainless steel
ER 1S = sea water resistant stainless steel
ER 2 = high-strength stainless steel

More information:
See material overview on page 50.

Ordering – connection

Connection

F	I	/	M	A
Fixed point	Connection type		Driver	Connection type

If no order designation for the connection is stated, we supply the connection variant **FAI/MAI (Standard)**.

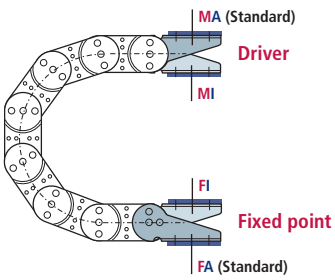

F – Fixed point
M – Driver

Connection type
A – Bolts facing outward **(Standard)**
I – Bolts facing inward

Guide channels
➤ from page 160

Strain relief devices
➤ from page 167

Cables for cable carrier systems
➤ in our LIFE-LINE Safety Cables catalogue.

Use our free project planning service.

Subject to change.

Cable Carrier for **Offshore**-applications

Type **S 5000 / 6000 / 7000**

Steel chain bands

Type **SX 5000 / 6000 / 7000**

Stainless steel chain bands

■ Steel cable carriers, in the delivery condition with transport frame

Materials

Chain bands and end connectors:

S 5000 / 6000 / 7000:

Steel, zinc-plated

SX 5000 / 6000 / 7000:

grade rust and acid resistant **steel**

Standard stay material: aluminium alloy

➔ see material properties, page 50

STEEL GALVANIZED
STAINLESS STEEL RUST-FREE

Chain width

customer-specific

available in 1 mm width sections

WIDTHSECTIONS 1 mm

Chain pitch

S/SX 5000: **200 mm** / S/SX 6000: **320 mm** / S/SX 7000: **450 mm**

Bend radii

various **standard bend radii**

from 500 – 2400 mm; intermediate radii upon request

For applications with extremely large additional loads and very large chain dimensions.

Cable carriers of the types 5000 / 6000 / 7000 are usually special designs for special applications such as, e.g. in the offshore area.

Type S/SX 5000 / 6000 / 7000

Rolling schematic illustration unsupported arrangement

Type	S/SX 5000	S/SX 6000	S/SX 7000
Chain pitch T	200	320	450
Height h_G	200	300	450
Connection height H	2 KR + 1.5 h_G		
Connection length l_1	75	125	200

A flat and level surface is required for the cable carrier to extend and retract reliably. Under certain conditions, a support tray needs to be installed (see page 163).

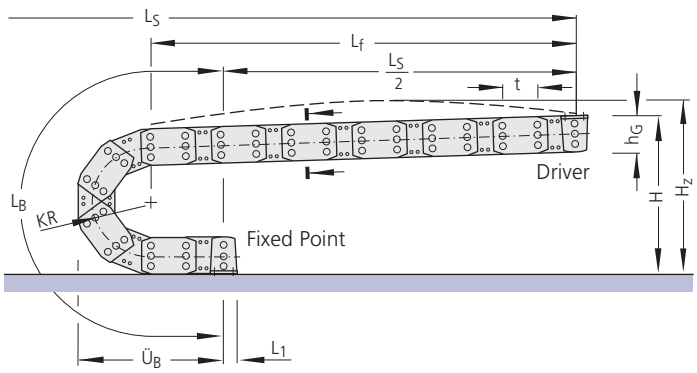

Variable sizes

depending on the bend radius

Type S/SX 5000

Dimensions in mm

Bend radius	500	600	800	1000	1200
Bend length L_B	2370	2685	3315	3940	4570
Bend overhang $Ü_B$	1075	1175	1375	1575	1775
Height H	1300	1500	1900	2300	2700

Type S/SX 6000

Dimensions in mm

Bend radius	700	900	1100	1300	1500
Bend length L_B	3480	4110	4735	5365	5995
Bend overhang $Ü_B$	1615	1815	2015	2215	2415
Height H	1850	2250	2650	3050	3450

Type S/SX 7000

Dimensions in mm

Bend radius	1100	1250	1500	1800	2400
Bend length L_B	5255	5725	6510	7450	9335
Bend overhang $Ü_B$	2425	2575	2825	3125	3725
Height H	2875	3175	3675	4275	5475

Chain length:

$$L_K \approx \frac{L_S}{2} + L_B$$

rounded to chain pitch

Installation height*:

$$H_Z = H + z$$

Pre-tension z ≈ 10 mm/m chain length

* required clear height

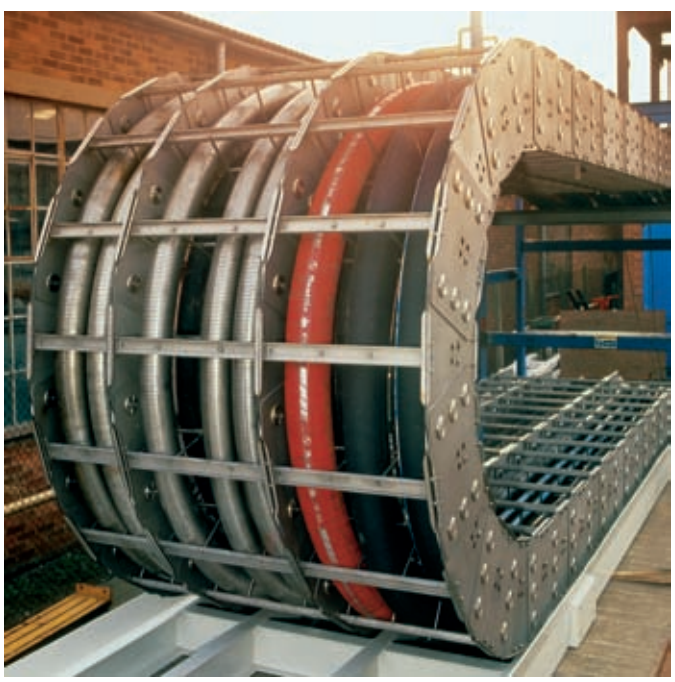

Use our free project planning service.

Subject to change.

Type S/SX 5000 / 6000 / 7000

Load diagramm

Unsupported length L_f and
travel length L_S without support
depending on the additional load
(see design guidelines).

The intrinsic chain weight has been based on the weight of the chain bands for the load diagram.

40 kg/m for Type **S/SX 5000**
50 kg/m for Type **S/SX 6000**
125 kg/m for Type **S/SX 7000**

The permitted additional load is reduced by the difference for a larger intrinsic weight.

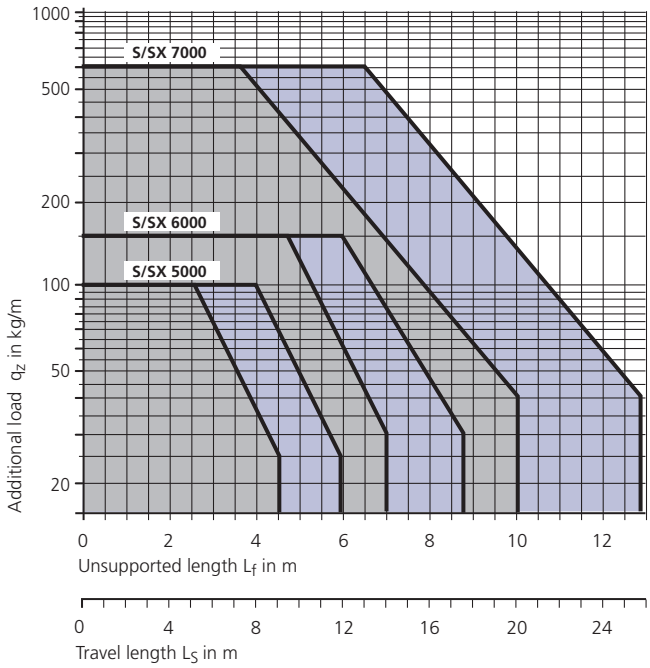

S 5000/6000/7000 material **Steel**
SX 5000/6000/7000 material **ER 2**
SX 5000/6000/7000 material **ER 1**

Type S/SX 5000 / 6000 / 7000

Chain cross section

Chain and stay width

Dimensions in mm

Type	Chain width	Stay width B_{St}	$h_{i\ max}$
S/SX 5000	B_i + 117	B_i + 38	150
S/SX 6000	B_i + 123	B_i + 38	240
S/SX 7000	B_i + 150	B_i + 60	370

Type	B_k min	B_k max	s_T	a_T max	a_x max
S/SX 5000	250	1200	10	150	150
S/SX 6000	300	1500	10	200	200
S/SX 7000	350	1800	10	250	250

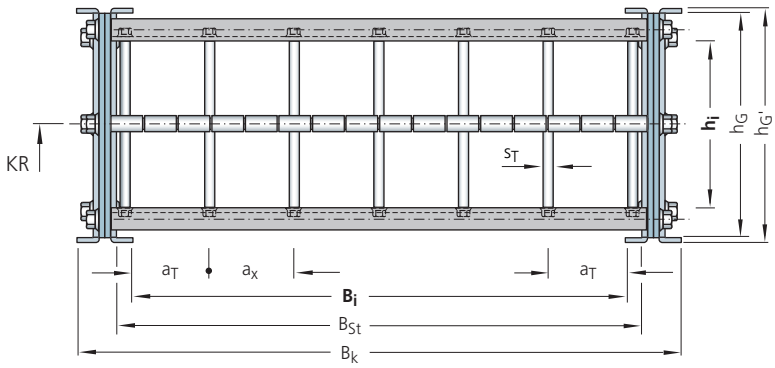

All chain cross sections according to sectional information in the schematic illustration.

Intrinsic chain weight

for two band chains
depending on the chain width.

Weight of the chain bands (excluding stays):

40 kg/m for type **S/SX 5000**
50 kg/m for type **S/SX 6000**
125 kg/m for type **S/SX 7000**

- **Type S/SX 5000**
- **Type S/SX 6000**
- **Type S/SX 7000**

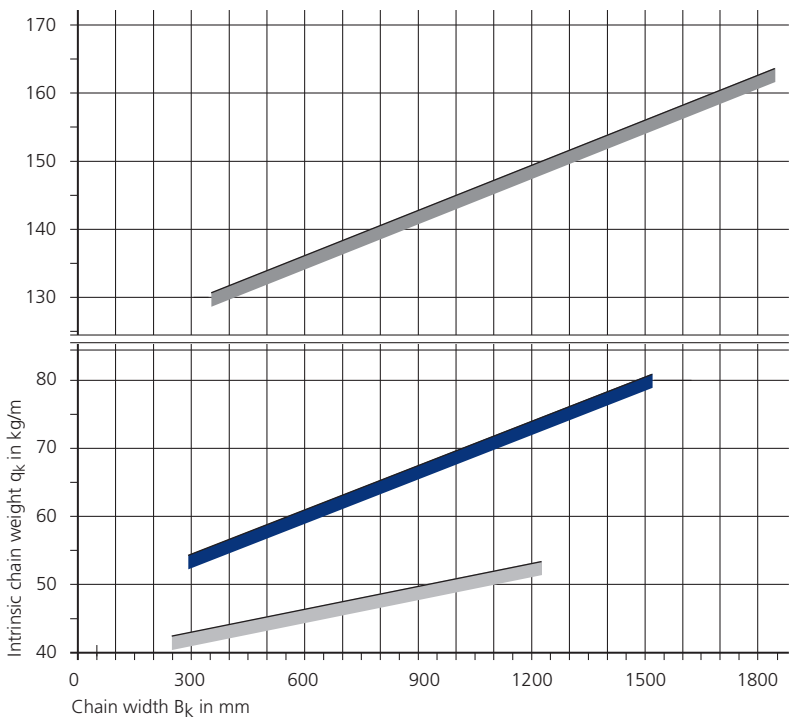

Design and ordering

Please contact us, we would be happy to advise you.

Guide channels
➤ **from page 160**

Strain relief devices
➤ **from page 167**

Cables for cable carrier systems
➤ **in our LIFE-LINE Safety Cables catalogue.**

Use our free project planning service.

Subject to change.

Type S/SX 5000 / 6000 / 7000

Fixed point connection

Connection variant FA

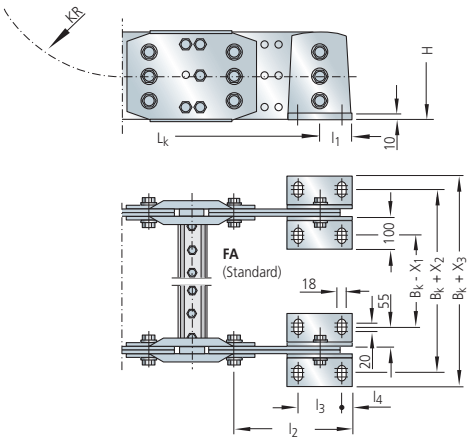

Connection variant FI

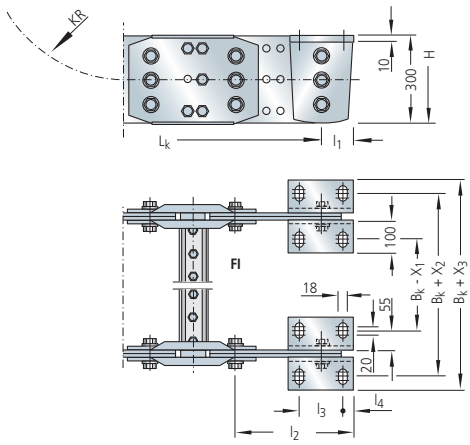

Driver connection

Connection variant MA

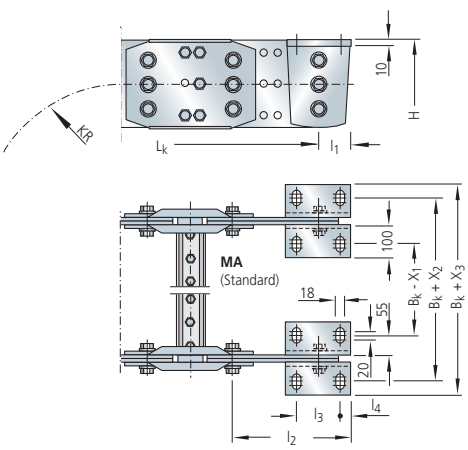

Connection variant MI

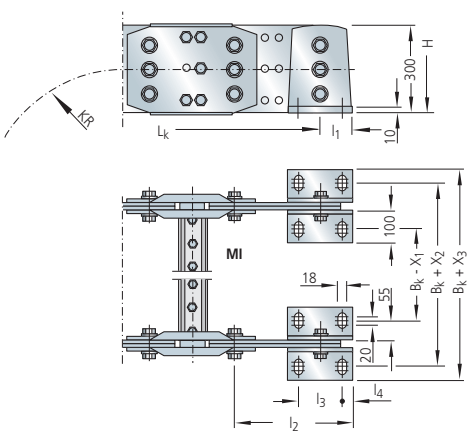

Type	S/SX 5000	S/SX 6000	S/SX 7000
l_1	75	125	200
l_2	275	445	650
l_3	100	200	230
l_4	25	25	25
X_1	189	195	200
X_2	44	38	38
X_3	134	128	128

Driver and fixed point connection using double end connectors on the inside link plates.

Different connection variants for fixed point and driver are possible according to the drawing information and are realized by different assembly of the connecting pieces.
The connection variants can also be changed at a later date if required.

Use our free project planning service.

Subject to change.

CONDUFLEX

Closed designer cable carrier.

Type	Height h_i	Clear width B_i
CF 055	25	45
CF 060	40	36
CF 085	38	73
CF 115	52	102
CF 120	70	100
CF 175	72	162

2D/3D-Data
www.kabelschlepp.de/cad

- enclosed cable carriers in a sophisticated design
- attractive appearance due to stainless steel crossbars and frame made of fiberglass reinforced polyamide
- easy replacement of the crossbars where external damage has occurred
- optimized protection for cables and hoses
- subsequent shortening or lengthening is possible easily
- TÜV type tested according to 2 PfG 1036/10.97

MOBIFLEX

Enclosed cable carriers with flexible metal helical tube

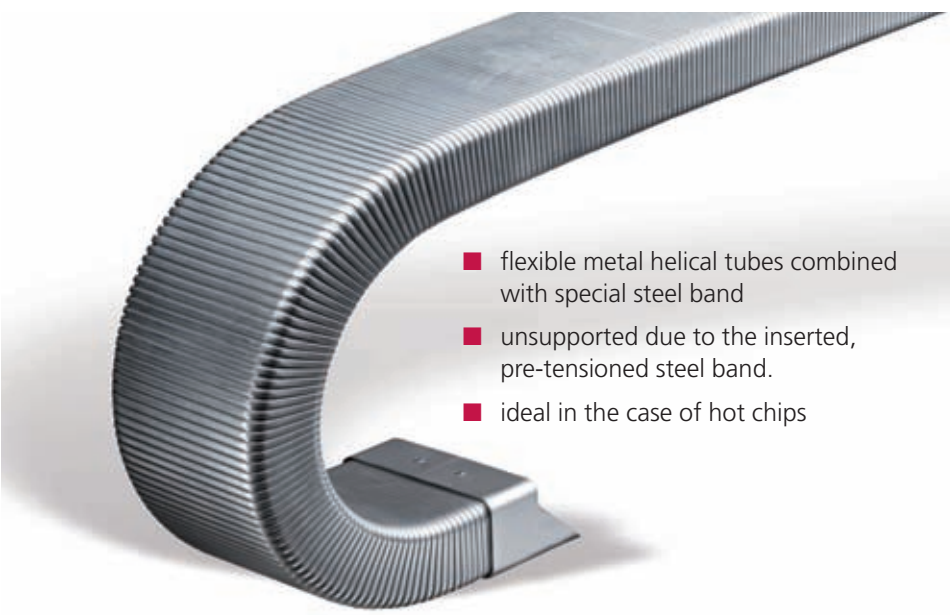

- flexible metal helical tubes combined with special steel band
- unsupported due to the inserted, pre-tensioned steel band.
- ideal in the case of hot chips

Type	Height h_i	Clear width B_i
MF 030.1	24	26
MF 050.1	24	45
MF 050.2	44	45
MF 080.1	40	80
MF 080.2	54	80
MF 080.3	78	80
MF 110.1	53	109
MF 110.2	73	109
MF 110.3	108	109
MF 170.1	72	170
MF 170.2	102	170
MF 170.3	167	170

Flexible Energy Conduits CONDUFLEX

Rolling schematic illustration unsupported arrangement

Chain pitch t = type-dependent, see dimensions table on page 145

Height h_G = see hose cross sections on page 145

Connection height H = 2 KR + h_G

Connection length l_1 = see connection dimensions

A flat and level surface is required for the flexible conduit to be installed properly. If necessary a support tray should be used (see page 163).

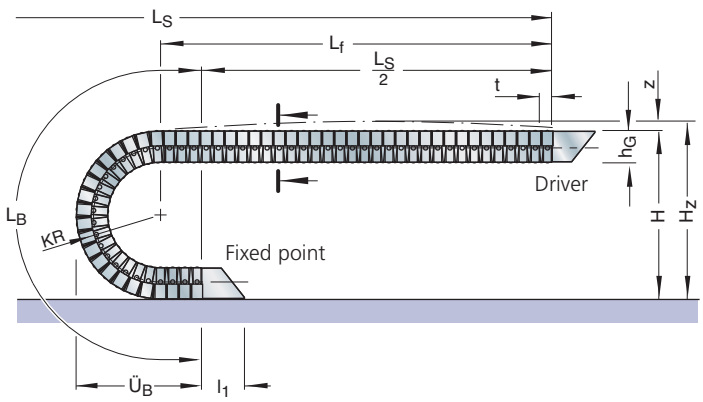

Variable sizes

depending on the bend radius

Dimensions in mm

CONDUFLEX Type	KR	L_B	$Ü_B$	H_{min}	Conduit weight in kg/m
CF 055	65 100 150	405 515 675	184 219 269	168 238 338	**1.25**
CF 060	100	515	226	252	**1.60**
CF 085	100 150 200 250	515 675 830 985	226 276 326 376	252 353 452 552	**1.90**
CF 115	140 225 300	690 960 1200	299 384 459	347 517 667	**2.60**
CF 120	155 200	740 880	323 368	396 486	**3.80**
CF 175	185 250 350	830 1035 1400	382 447 547	464 594 794	**5.20**

KR = Bend radius

L_B = Length of bend

$Ü_B$ = Bend overhang

H_{min} = Minimum connection height

Length of conduit:

$$L_{ES} \approx \frac{L_S}{2} + L_B$$

rounded to pitch t

Load diagramm

Unsupported length L_f and **travel length L_S without support** depending on the additional load (see design guidelines).

Long travel lengths

If the unsupported length of the flexible conduit is exceeded, it may be possible to cover the required travel length with the assistance of suitable supports.
Please contact us.

Design: see Construction Guidelines.

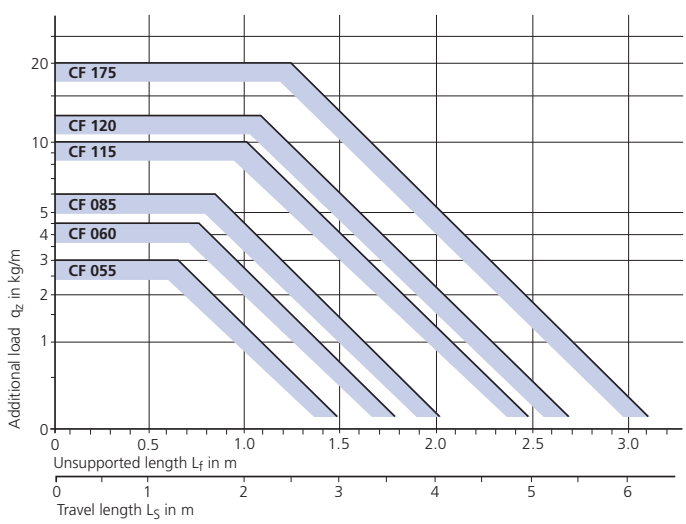

Use our free project planning service.

Subject to change.

Flexible Energy Conduits CONDUFLEX

Cross section according to sectional information in the schematic illustration

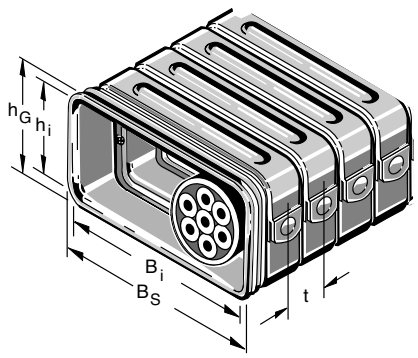

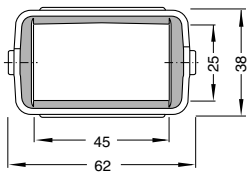

CONDUFLEX
Type CF 055*

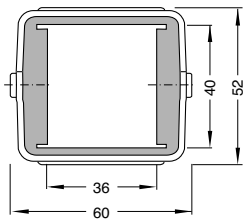

CONDUFLEX
Type CF 060

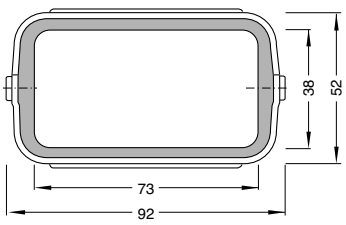

CONDUFLEX
Type CF 085*

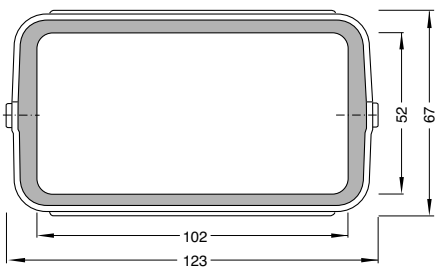

CONDUFLEX
Type CF 115*

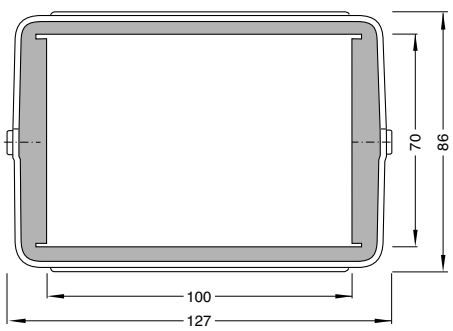

CONDUFLEX
Type CF 120

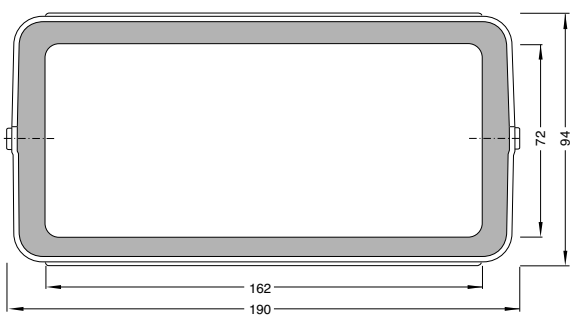

CONDUFLEX
Type CF 175*

Dimensions

Dimensions in mm

CONDUFLEX Type	B_S	B_i	h_G	h_i	t
CF 055*	62	45	38	25	20
CF 060	60	36	52	40	20
CF 085*	92	73	52	38	20
CF 115*	123	102	67	52	25
CF 120	127	100	86	70	25
CF 175*	190	162	94	72	30

*) CONDUFLEX flexible energy conduits types CF 055, CF 085, CF 115 und CF 175 can be fitted with protective straps to shield the impact slots of the plastic frames from contamination.

The "Guidelines for Installing Cables and Hoses in Cable Carriers" are to be observed when planring a CONDUFLEX flexible energy conduit (see Construction Guidelines)!

Flexible Energy Conduits CONDUFLEX

Connection dimensions

Diagonal flange connector bracket – SF

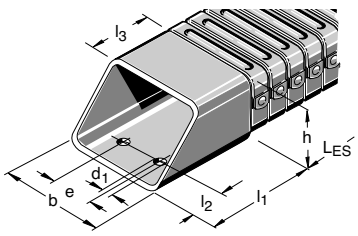

Dimensions in mm

CONDUFLEX Type	b	h	e	d_1	l_1	l_2	l_3
CF 055	55	36	22	6.5	44	12.5	20
CF 060	55	52	22	6.5	44	12.5	20
CF 085	85	50	50	6.5	70	15.0	32
CF 115	117	66	70	8.5	84	17.5	34
CF 120	120	84	70	8.5	82	17.5	48
CF 175	182	92	100	10.5	100	22.5	45

Connector variants for diagonal flange connectors SF

Connecting surfaces outside/outside

1

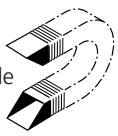

Connecting surfaces inside/outside

2

Connecting surfaces inside/inside

3

Please state the position of the connecting surfaces when ordering.

Standard connector bracket – ST

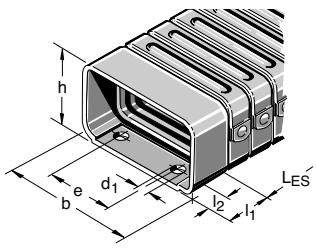

Dimensions in mm

CONDUFLEX Type	b	h	e	d_1	l_1	l_2
CF 055	55	36	22	6.5	20	8.5
CF 060	–	–	–	–	–	–
CF 085	85	52	50	6.5	25	10.0
CF 115	116	68	65-70	8.5	35	10.0
CF 120	120	84	70	8.5	35	12.5
CF 175	182	92	100	10.5	40	15.0

Connector variants for standard connectors ST

Connecting surfaces outside/outside

1

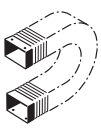

Connecting surfaces inside/outside

2

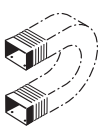

Connecting surfaces inside/inside

3

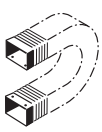

Please state the position of the connecting surfaces when ordering.

Cross flange connector bracket – QF

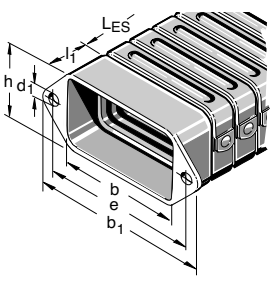

Dimensions in mm

CONDUFLEX Type	b	h	b_1	e	d_1	l_1
CF 055	55	35	90	75	6.5	20
CF 060	–	–	–	–	–	–
CF 085	85	50	120	105	6.5	25
CF 115	116	64	160	140	8.5	35
CF 120	–	–	–	–	–	–
CF 175	182	90	226	200	10.5	40

High flange connector bracket – HF

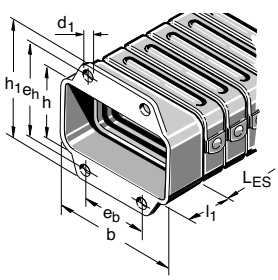

Dimensions in mm

CONDUFLEX Type	b	h	h_1	e_b	e_h	d_1	l_1
CF 055	55	35	70	18	55	6.5	20
CF 060	–	–	–	–	–	–	–
CF 085	85	50	85	45	70	6.5	25
CF 115	116	64	110	60	90	8.5	35
CF 120	–	–	–	–	–	–	–
CF 175	182	90	136	95	110	10.5	40

The connectors SF, ST, QF and HF can be combined. Please state when ordering.

Use our free project planning service.

Subject to change.

Flexible Energy Conduits CONDUFLEX

Ordering – cable carrier

Cable Carrier

CF 115	-	140	-	1200
CONDUFLEX Type		Bend radius KR in mm		Length of conduit L_{ES} in mm (without connection)

Ordering – connection

Connection

F	QF	/	M	HF
Fixed point	Connection type		Driver	Connection type

Connector variants for diagonal flange connectors SF

Connecting surfaces outside/outside
1

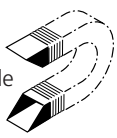

Connecting surfaces inside/outside
2

Connecting surfaces inside/inside
3

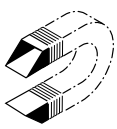

Connector variants for standard connectors ST

Connecting surfaces outside/outside
1

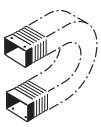

Connecting surfaces inside/outside
2

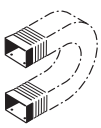

Connecting surfaces inside/inside
3

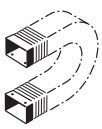

Please state the position of the connecting surfaces for connection variants SF and ST when ordering.

Guide channels
➤ from page 160

Strain relief devices
➤ from page 167

Cables for cable carrier systems
➤ in our LIFE-LINE Safety Cables catalogue.

Flexible Energy Conduits MOBIFLEX

Rolling schematic illustration unsupported arrangement

Height h_G = see hose cross sections

Connection height H = 2 KR + h_G

Required clearance height H_Z = H + z (z ≈ 50 mm)

Bend overhang $Ü_B$ = 1.5 KR + h_G/2

A flat and level surface is required for the flexible conduit to be installed properly.
If necessary a support tray should be used (see page 163).

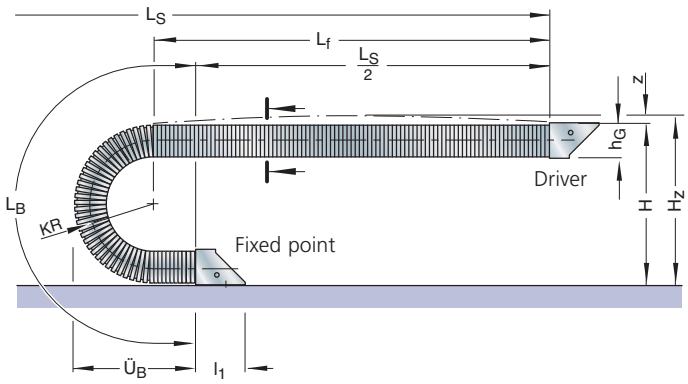

Dimensions / Weights

Dimensions in mm/Weights in kg/m

MOBIFLEX Type	B_S	B_i	h_G	h_i	Available bend radii KR				Weight G_S	Contraction L_{VK}
MF 030.1	30	26	30	24	80	–	–	–	1.2	45
MF 050.1	50	45	30	24	75	100	–	150	2.0	45
MF 050.2	50	45	50	44	110	150	–	200	2.5	80
MF 080.1	85	80	45	40	100	150	–	200	3.0	70
MF 080.2	85	80	60	54	150	200	–	250	3.5	95
MF 080.3	85	80	85	78	200	–	–	–	5.1	135
MF 110.1	115	109	60	53	150	200	–	250	4.8	95
MF 110.2	115	109	80	73	200	250	–	350	5.3	125
MF 110.3	115	109	115	108	300	–	–	–	6.6	180
MF 170.1	175	170	80	72	190	250	300	350	7.2	125
MF 170.2	175	170	110	102	250	300	–	400	8.2	175
MF 170.3	175	170	175	167	365	–	–	–	9.2	275

Specified bend radii = KR_{max}
Production-related tolerances: - 20 bis - 30 mm

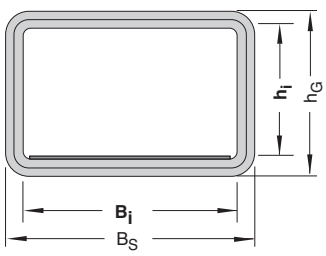

Length of conduit (with loop):

$$L_{ES} \approx \frac{L_S}{2} + L_B$$

Bend length
L_B = KR · π + Reserve (KR)

Stretched length of conduit:

$$L_{stretched} = L_{ES} - L_{VK}$$

Shortening of conduit
$L_{VK} = h_G/2 \cdot \pi$

Load diagramm

Unsupported length L_f and **travel length L_S without support** depending on the additional load (see design guidelines).

Long travel lengths

If the unsupported length of the flexible conduit is exceeded, it may be possible to cover the required travel length with the assistance of suitable supports.
Please contact us.

Design: see Construction Guidelines.

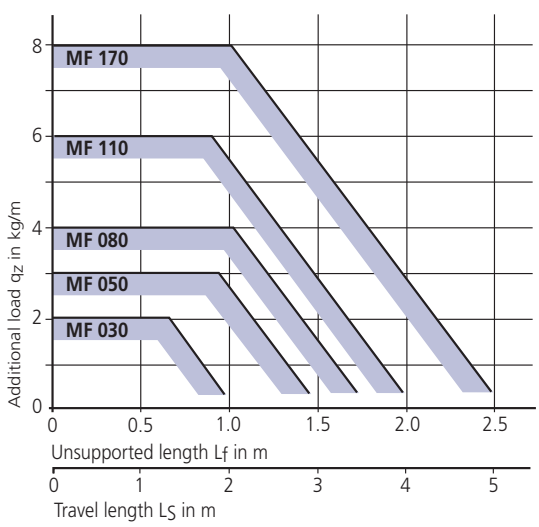

Use our free project planning service.

Subject to change.

Flexible Energy Conduits MOBIFLEX

Connection Dimensions

Diagonal flange connector bracket – SF

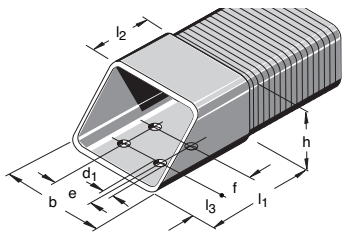

Dimensions in mm

Type	b	h	e	f	d	l_1	l_2	l_3
MF 030.1	34	34	–	40	9	120	60	10
MF 050.1	54	34	20	40	9	120	60	10
MF 050.2	54	54	20	40	9	120	60	10
MF 080.1	90	50	50	40	9	120	60	10
MF 080.2	90	65	50	40	9	120	60	10
MF 080.3	90	90	50	40	9	120	60	10
MF 110.1	120	65	80	40	9	120	60	10
MF 110.2	120	85	80	40	9	120	60	10
MF 110.3	120	120	80	40	9	120	60	10
MF 170.1	180	85	140	40	9	120	60	10
MF 170.2	180	115	140	40	9	120	60	10
MF 170.3	180	180	140	40	9	120	60	10

Connector variants for diagonal flange connectors SF

Connecting surfaces outside/outside
1

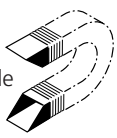

Connecting surfaces inside/outside
2

Connecting surfaces inside/inside
3

Please state the position of the connecting surfaces when ordering.

Standard connector bracket – ST

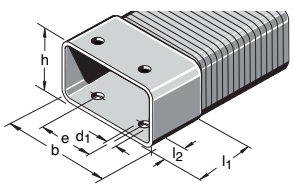

Cross flange connector bracket – QF

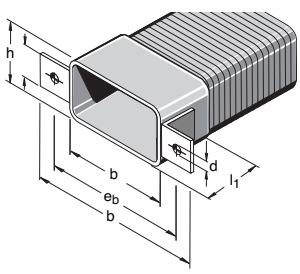

Dimensions in mm

Type	b	h	e	e_b	e_h	d	l_1	l_2	b_w	b_1	h_1
MF 030.1	34	34	–	56	56	9	60	20	20	74	74
MF 050.1	54	34	20	76	56	9	60	20	20	94	74
MF 050.2	54	54	20	76	76	9	60	20	20	94	94
MF 080.1	89	49	50	111	71	9	75	20	20	129	89
MF 080.2	89	64	50	111	86	9	75	20	20	129	104
MF 080.3	89	89	50	111	111	9	75	20	20	129	129
MF 110.1	119	64	80	141	86	9	95	20	20	159	104
MF 110.2	119	84	80	141	106	9	95	20	20	159	124
MF 110.3	119	119	80	141	141	9	95	20	20	159	159
MF 170.1	179	84	140	201	106	9	95	20	20	219	124
MF 170.2	179	114	140	201	136	9	95	20	20	219	154
MF 170.3	179	179	140	201	201	9	95	20	20	219	219

Front flange connectors can be supplied in accordance with customer drawings.

High flange connector bracket – HF

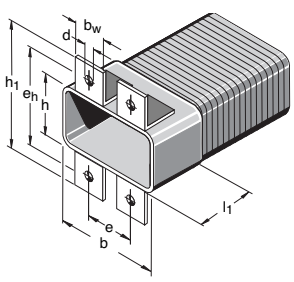

The connectors SF, ST, QF and HF can be combined. Please state when ordering.

Flexible Energy Conduits MOBIFLEX

Ordering – cable carrier

Cable Carrier

MF 170.2	-	300	-	1800
MOBIFLEX Type		Bend radius KR in mm		Length of conduit L_{ES} in mm (without connection)

Ordering – connection

Connection

F	QF	/	M	HF
Fixed point	Connection type		Driver	Connection type

Connector variants for diagonal flange connectors SF

Connecting surfaces outside/outside

1

Connecting surfaces inside/outside

2

Connecting surfaces inside/inside

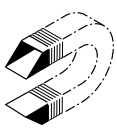

3

Please state the position of the connecting surfaces for connection variant SF when ordering.

Guide channels
➤ from page 160

Strain relief devices
➤ from page 167

Cables for cable carrier systems
➤ in our LIFE-LINE Safety Cables catalogue.

Use our free project planning service.

Subject to change.

Electrical cables for cable carriers

LIFE-LINE Safety Cables

Continuous bending hi-flex electrical cables for cable carriers

Fully harnessed cable carrier systems

TOTALTRAX

Cable carrier, cable and connector – ready to connect

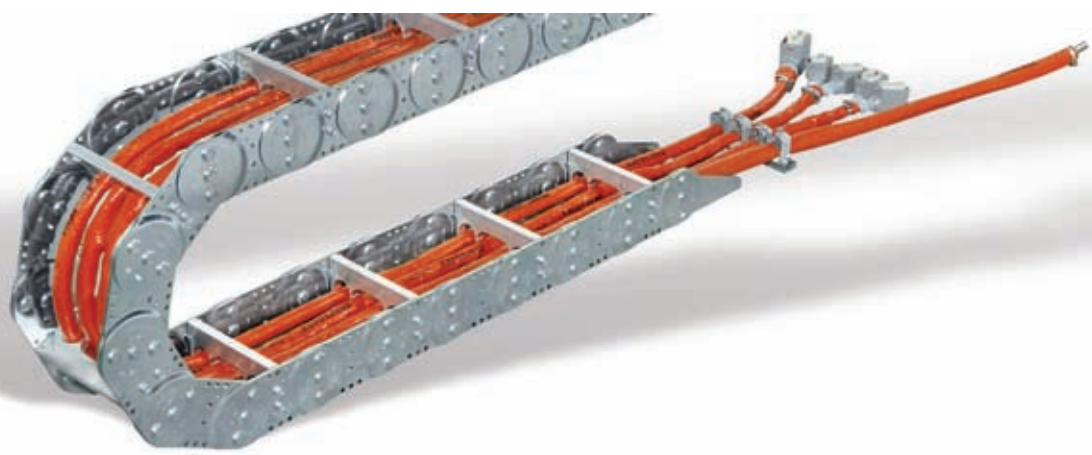

Cost-effective – safe – reliable.

LIFE-LINE cable carrier systems designed by the experts for the experts.

LIFE-LINE cables have been specially developed for use in cable carriers. The use of high quality materials and the optimized design reduce the risk of failure due to corkscrew formation, broken cores or insulation damage.

Different series with various performance characteristics help you to find the suitable cable for your application. Many economically priced PVC insulation and jacket materials are sufficient for applications with short travel lengths. On the other hand, higher quality PUR cables are recommended for extremely long travel lengths or high travel speeds.

You will find cables for different applications with a large choice of cross sections in our cable range – **available directly from stock**.

- **Series 200 Standard**
  cost-effective **PVC** standard cables
  for a wide range of applications
- **Series 400/400 Standard*PLUS***
  PVC standard cables ***PLUS***
  for challenging applications
- **Series 700**
  high-quality **PUR** cables for the most challenging applications
- **Series 800 and 900**
  PUR-system cables

LIFE-LINE Cable types

- Control cables
- Power cables
- Data cables
- BUS-/LWL-/Coaxial cables
- System cables with connections compatible with the SIEMENS/INDRAMAT standard
- LIFE-LINE harnessed:
  USB / CAT5
  Signal cables with connections compatible with the SIEMENS standard
  Power cables with connections compatible with the SIEMENS standard

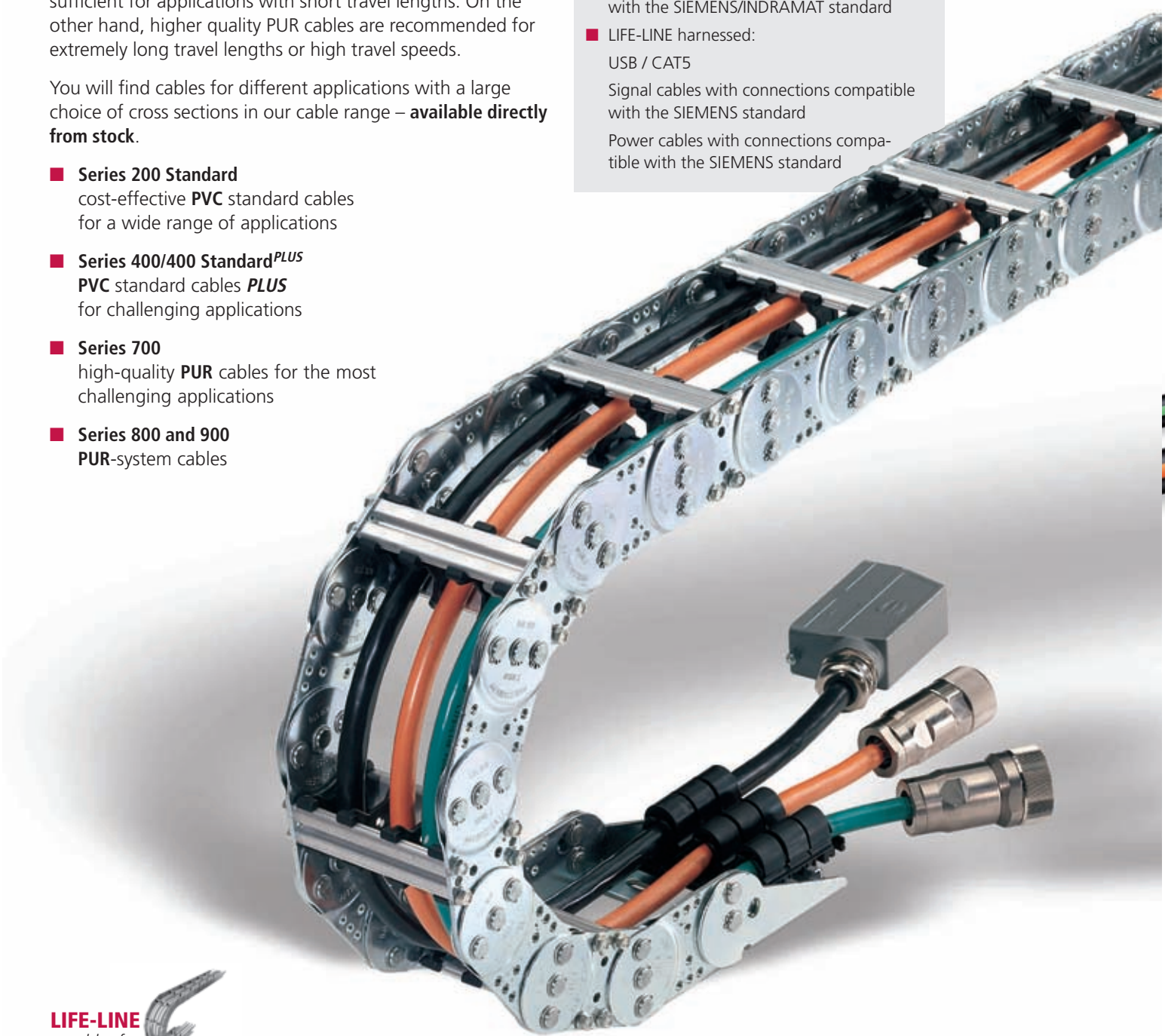

LIFE-LINE
cables for cable carriers

■ Pre-assembled LIFE-LINE electrical cables in a steel cable carrier S 0950

Design features which give you reliability.

- Outer jacket made of highly flexible and resistant special compounds
- Maximum stability and service life due to valley-sealed filling extrusion technology (type-dependent)
- Requirements-optimized cabling (layer cabling, low torsion in short pitches / bundled stranding / hybrid layouts)
- Valley-sealed extruded inner jacket (type-dependent)
- Flexible shielding with outstanding electrical properties for shielded types
- Use of high quality and application-optimized core elements
- Small bend radii for compact cable carriers
- UL/CSA approval (type-dependent)
- DESINA jacket colors (type-dependent)
- DESINA with ICC (type-dependent)

KABELSCHLEPP Integrated Colour Code

- Co-extruded ICC Color Identification based on DESINA color code. Power, control and BUS cables etc. have different color codes to be easily visually differentiated. Thus, shorter assembly or service times result in cost reduction.
- The ICC Color Code System also serves as **helpful tool** when installing the cables into the carrier.
- **UV-resistant** black outer jacket for outdoor and indoor applications.

KABELSCHLEPP LIFE-LINE cable database for EPLAN.

EPLAN has developed over more than 20 years into a leading E-CAD system and has become more or less established as a standard in some branches.

As a provider of continuous bending highly flexible electrical cables for cable and hose carriers, we offer you the KABELSCHLEPP LIFE-LINE cable databases as a superior tool for optimising your daily work with EPLAN.

The databases are optimized for use in EPLAN5 and for transmission according to EPLAN P8 electric.

EPLAN

- Easy cable selection by construction
- Automatic addition of core number, cross-section and core colour
- Complete data for parts lists and other evaluations

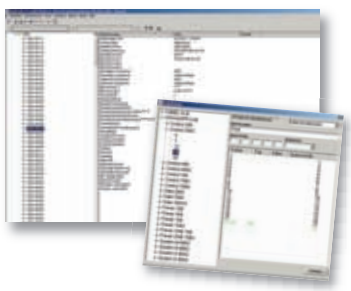

Cut-to-order in our KABELSCHLEPP cable warehouse.

We cut our KABELSCHLEPP LIFE-LINE electrical cables according to your individual order in our cable warehouse.

Our vast inventory range offers cables for almost every application.

- KABELSCHLEPP cable warehouse

Large selection of types – available directly from stock.

You will find cables for different application areas with a large choice of various cross sections in our cable range – directly available from stock.

The complete cable range can be found in our LIFE-LINE Safety Cables catalogue. Please request a copy.

More information:
www.kabelschlepp.de/lifeline

Product overview LIFE-LINE Safety Cables

PVC control cables

LIFE-LINE Control 200 Standard
LIFE-LINE Control 200 C Standard

- Cost-effective standard control cables **for a wide range of applications**
- Unsupported and gliding applications with normal load for average bend radii as well as speeds
- Black outer jacket for high UV-resistance, also suitable for outdoor applications; co-extruded ICC Color Code Identification based on DESINA color code simplifies the correct cable installation into the carrier

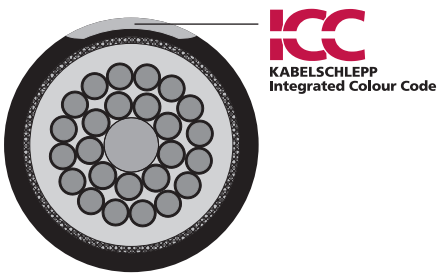

- Example of layered stranding shielded design

PVC control cables

LIFE-LINE Control 400 Standard*PLUS*
LIFE-LINE Control 400 C Standard *PLUS*

- Standard*PLUS* control cables **for more challenging applications**
- Unsupported and gliding applications with small bend radii and high speeds
- Black outer jacket for high UV-resistance, also suitable for outdoor applications; co-extruded ICC Color Code Identification based on DESINA color code simplifies the correct cable installation into the carrier

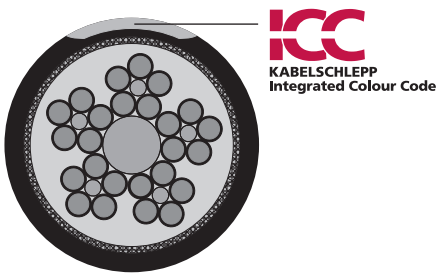

- Example of bundled stranding shielded design with 25 cores

PVC control cables

LIFE-LINE Control 700
LIFE-LINE Control 700 C

- High-quality PUR control cables **for even the most challenging** applications
- Unsupported and gliding applications with smallest bend radii and very high speeds; especially suitable for long travel lengths
- For indoor and outdoor applications
- Optimized bundle-stranding > 8 strands for highest availability
- Shielded design with continuous bending hi-flex braided shield

- Example of bundled stranding shielded design

PUR BUS/Koax/LWL cables

LIFE-LINE Profibus, CAN-BUS, USB, Interbus, CAT5, DeviceNet, Koax, LWL 700

- Super-flexible, continuous bending hi-flex and robust PUR-BUS-/Koax-/LWL cables
- For universal and extremely challenging applications in cable carriers
- For unsupported and long gliding applications with small bend radii

- Example of USB design

Product overview LIFE-LINE Safety Cables

PVC power cables

LIFE-LINE Power 400
LIFE-LINE Power 400 C

- High-quality, robust PVC motor cables **for challenging applications**
- Unsupported and gliding applications for small bend radii and high speeds
- Particularly suitable for long travel lengths
- Suitable for indoor and outdoor applications
- High wear-resistant and robust outer jacket

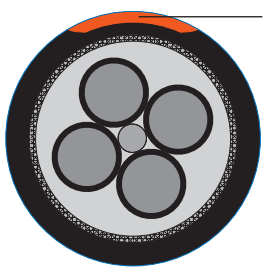

ICC KABELSCHLEPP Integrated Colour Code

- Example of layered stranding shielded design

PUR power cables

LIFE-LINE Power 700/ONE 700
LIFE-LINE Power 700 C/ONE 700 C

- High-quality, robust PUR motor cables **for even the most challenging applications**
- Unsupported and gliding applications for very small bend radii and very high speeds
- Particularly suitable for long travel lengths
- For indoor and outdoor applications
- High wear-resistant and nick-resistant outer jacket
- Individual strands with double-jacket
- Shielded design with continuous bending hi-flex braided shield

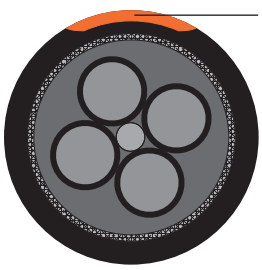

ICC KABELSCHLEPP Integrated Colour Code

- Example of layered stranding shielded design

PUR data cables

LIFE-LINE Data 700 C
LIFE-LINE Data 700 CD

- Super-flexible, continuous bending hi-flex and robust PUR data cables with inner jacket
- Pair-stranding cabling and complete shielding – suitable for critical EMC environments
- For universal and extremely challenging applications in cable carriers
- For unsupported and very long gliding applications with small bend radii
- Particularly suitable for high speeds and accelerations
- Double shielded CD version

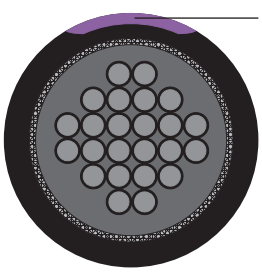

ICC KABELSCHLEPP Integrated Colour Code

- Example of pair-stranding shielded design

PUR system cables

LIFE-LINE System S 800 C/M 800 C
LIFE-LINE System S 900 C/M 900 C

- High-quality PUR combi-cables **for challenging system applications**
- Unsupported and gliding applications for small bend radii and high speeds
- Suitable for long travel lengths
- For indoor and outdoor applications
- Reliable transmission according to SIEMENS- or INDRAMAT specifications

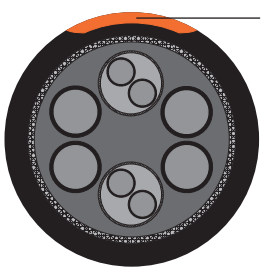

ICC KABELSCHLEPP Integrated Colour Code

- Example of motor cable with control strands

TOTALTRAX turn-key systems.

Fully harnessed cable carrier systems.

You know what product you need – we supply it to you completely harnessed.

One supplier and contact person for the complete system

We develop, design and supply all components required for your individual cable & hose carrier system.

■ Ready-to-connect assembled plastic cable carrier system, packed ready for installation

Everything from a single source

- Consulting
- Planning
- Design
- Cable carriers
- Electrical cables
- Complete guarantee
- Hydraulic hoses
- Pneumatic hoses
- Plug-and-socket connectors
- Assemply plates
- Complete assembly of all components

+ One contact person
+ One order
+ One delivery
+ Guaranteed quality

= **TOTALTRAX Complete System**

TOTALTRAX – from design to the complete system

NOTE:
We also manufacture cables according to SIEMENS and INDRAMAT specifications

KABELSCHLEPP LIFE-LINE cables are harnessed according to SIEMENS-/INDRAMAT specifications, suitable for SIEMENS or INDRAMAT drive controls which consist of signal and power cables and/or extension cables.

- any cable length available
- delivery minimum: 1 unit

More Information: **www.kabelschlepp.de**

Subject to change.

Cut costs with TOTALTRAX complete cable carrier systems

We help you . . .

- Support in the design phase
- Only one contact person for the complete system including all the individual components
- Complete delivery from a single source
- Only one supplier – one purchase order and one item number
- All components match each other perfectly
- Guarantee certificate upon requests

. . . to cut your costs!

- Goods receiving inspections for all individual components are no longer required
- Expensive technical personnel and special tools are no longer required
- Shorter assembly times
- No hidden costs, e.g. cables being cut to excessive lengths etc.
- Less captive capital with almost no inventory
- On-time delivery directly to your production siteo

No storage costs for individual components

Our warehouses offer cables, plug-and-socket connectors as well as many other individual components.

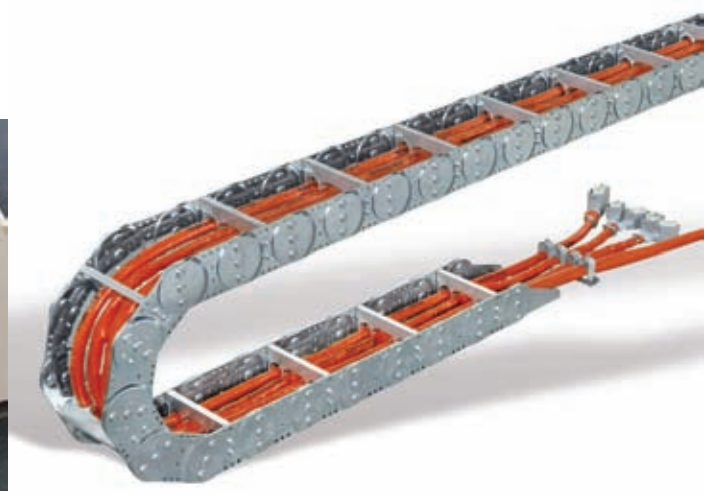

■ Completely pre-assembled steel cable carriers with cables and connectors.

Complete service – even for applications with extreme assembly conditions

Our service team can design and assemble your cable carrier system even for applications with extreme assembly conditions.

Our service center experts provide you with the support you need.

- Complete assembly with guide channels
- Uncoiling of harnessed cable carrier systems with long travel lengths
- Assembly at great heights (e. g. crane systems)

■ Fully harnessed cable carrier system in shipping crate

■ Assembly of the fully harnessed cable carrier system

Accessories for steel cable carriers

Guide channels
Support trays
Support rollers
Steel strip covers
Strain relief devices

Guide channels made of steel plate

for installation variant EBV 05.

Guide channels provide the side guidance of the cable carrier in the sliding arrangement. They prevent the upper trough slipping off the lower trough.

For long travel lengths, the cable carrier upper trough glides on the lower trough and on the gliding surface of the guide channel (see installation variant EBV 05). The graphic 1 on the next page shows this principle.

In order to ensure the gliding of the chain bands, glide shoes are bolted on to the side plates of the cable carrier.

■ Upper trough gliding on the lower trough

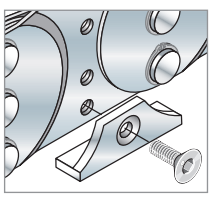

■ Standard glide shoes for S/SX 1250

Standard design

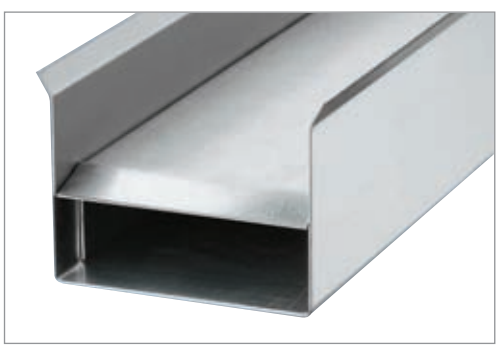

Materials: galvanized steel plate/ stainless steel

Supply length: standard length 2 m/ special lengths on request

- very easy and universal assembly – there is no alignment of the channel side walls with each other as there are no loose channel side walls
- large support widths due to stable U construction
- easy fixing options:
  – standard retaining plates
  – direct welding on-site
  – various special solutions with retaining bracket
- optionally as corrosion-resistant, sea water resistant version
- special glide pads are available for reducing glide resistance and wear between cable carrier and support. Please contact us.

Optional standard fixing with retaining plates

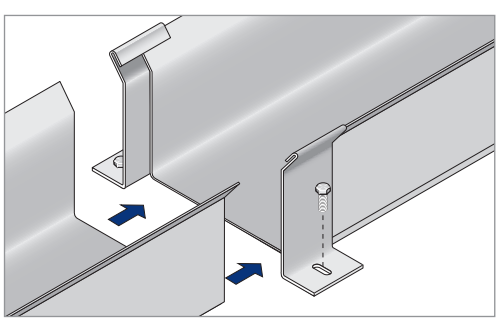

A retaining plate is mounted on the adjoining points and as well as fixing the channel to the floor also guarantees an exact connection of the adjoining points.

- optimum alignment of the adjoining points
- reduced installation times
- minimal number of threaded connections
- secure hold, also in harsh conditions

Please state the channel system when ordering if retaining plates will be needed.

Calculation of guide channel length L_{KA}

1 Single-sided arrangement of cable carriers

$$L_{KA} = L_S + L_{Z1} + L_{Z2}$$

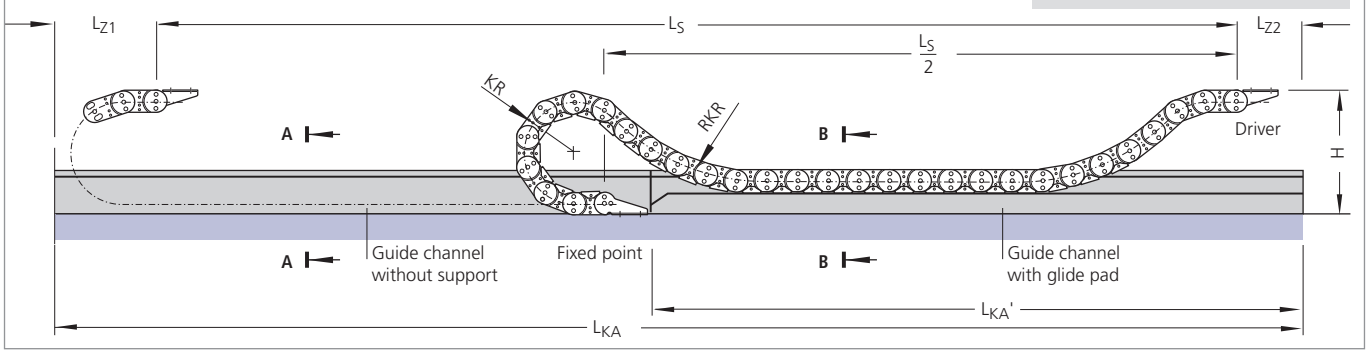

2 Opposing arrangement of cable carriers

$$L_{KA} = L_S + 2\,L_{Z1} + X$$

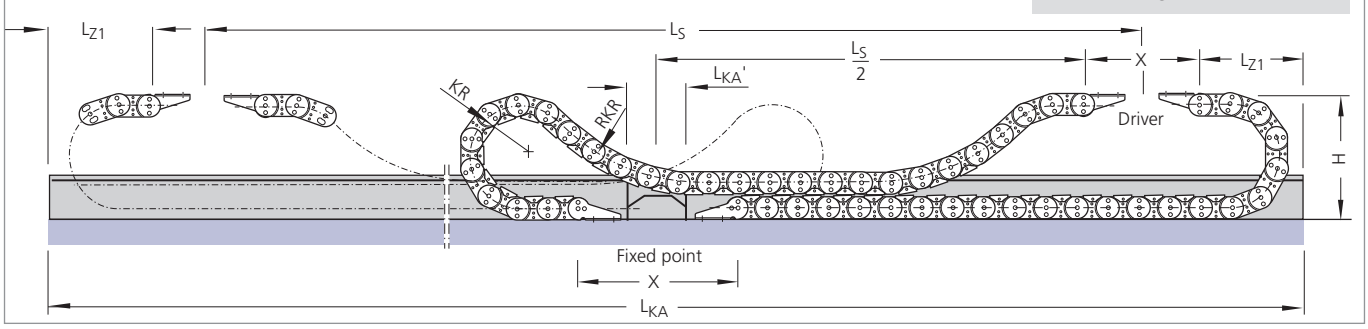

Abbreviations:

L_{KA} = Total channel length

$L_{KA'}$ = Channel length with support
≙ $L_S/2$ with single-sided arrangement
≙ $X - 2\,l_1$ with opposing arrangement

L_{Z1} = Additional dimension for loop overhang
≙ $Ü_B + 50$ mm

L_{Z2} = Additional dimension for connection
≙ $l_1 + 50$ mm

For all other abbreviations see page 5.

Channel cross-sections

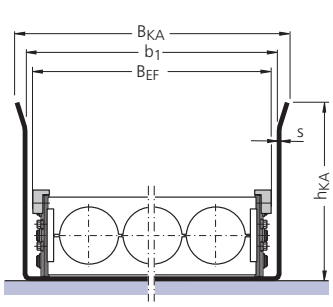

Cross section A - A
Channel profile without support

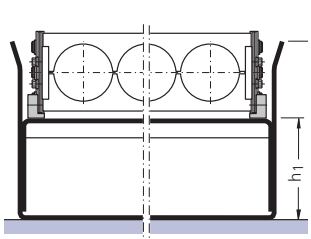

Cross section B - B
Channel profile with support

Dimensions, channel systems, steel chains

Dimensions in mm

Type	B_{EF}	b_1	B_{KA}	h_{KA}	s
S/SX 0650	$B_k + 5$	$B_k + 10$	$B_k + 30$	120 for KR ≤ 155 200 for KR > 155	2
S/SX 0950	$B_k + 9$	$B_k + 14$	$B_k + 34$	150 for KR ≤ 200 300 for KR > 200	2
S/SX 1250	$B_k + 6$	$B_k + 12$	$B_k + 32$	200 for KR ≤ 300 400 for KR > 300	3
S/SX 1800	$B_k + 8$	$B_k + 14$	$B_k + 34$	300 for KR ≤ 435 500 for KR > 435	3

B_{EF} = width of the cable carrier using glide shoes
b_1 = inside width of the channel
B_{KA} = width of the channel
h_{KA} = height of the channel
s = plate thickness
h_1 = height of the support

Guide channels for the other series are available on request.

Examples of guide channels special solutions in steel plate design.

Bottom open channel

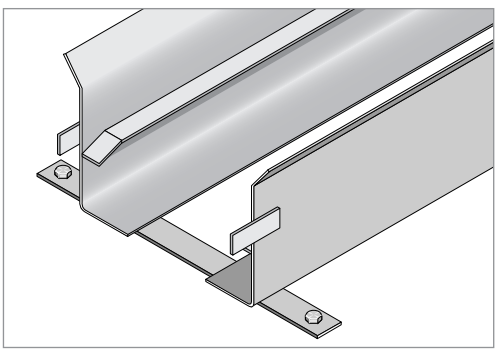

- for fine-grain dirt particles, water, etc. ...
- dust and dirt can drop through the open design below
- application area in washing plants, the woodworking industry, composting plants ...

STEEL GALVANIZED

STAINLESS STEEL RUST-FREE

With KABELSCHLEPP guide channels, you have various different options for fixing them to the ground or on a support structure as well as the standard fixing.

Also here, no adjoining point offset of the individual channel elements must occur at the connection points, i.e. sidewalls and floor must form a smooth surface.

Welded-on fixing plates

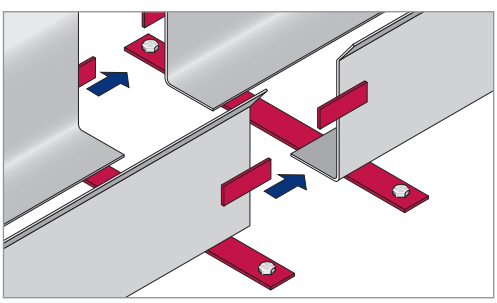

- very easy and universal assembly – there is no alignment of the channel side walls with each other as there are no loose channel side walls
- optimum alignment of the adjoining points
- reduced installation times
- minimal number of threaded connections
- plug-in system

Unsupported connection points

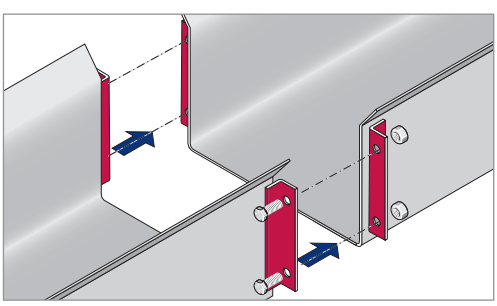

- unsupported adjoining points without support (self-supporting) using flange connections
- secure, fixed connection to adjoining points also for extreme vibrations or in unsupported channel arrangements.

Fixing with fixing brackets

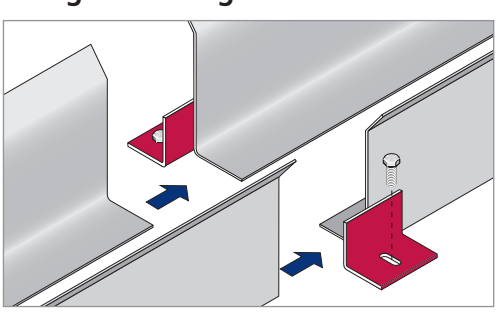

- easy alignment of the adjoining points
- reduced installation times
- minimized number of threaded connections

Support trays.

A flat surface is required when setting the cable carrier down. If this is not available on site, a support tray must be provided.

Materials: galvanized steel plate
stainless steel plate
aluminium plate

The standard supply length is 2 m.
Special lengths on request.

Length of support tray:

$$L_S \approx \frac{L_A}{2} = + Ü_B + l_1$$

(for standard connection)

$Ü_B$ = loop overhang

l_1 = connection length

$Ü_B$ and l_1 – see the cable carrier technical data

In the case of strain relief at the fixed point, the length of the support tray must be increased accordingly.

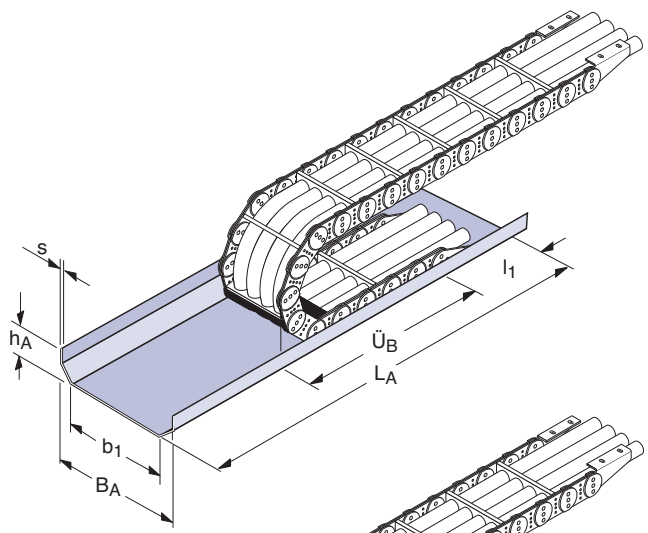

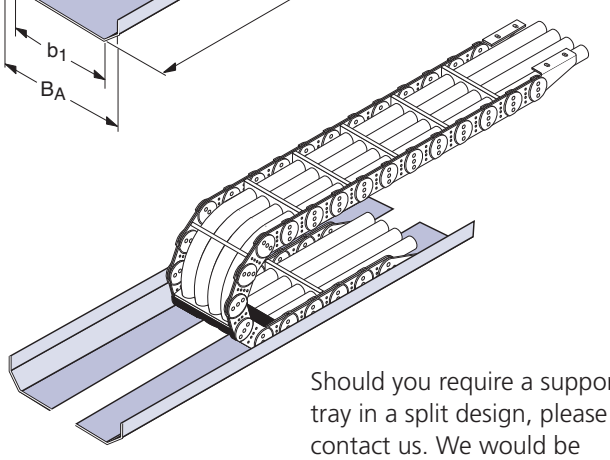

Should you require a support tray in a split design, please contact us. We would be happy to advise you.

Dimensions table

Dimensions in mm

Type	Clear width b_1	Total width B_A	Total height h_A	Steel sheet thickness
LS/LSX 1050	B_k + 15	B_k + 40	30	2
S/SX 0650/0950	B_k + 15	B_k + 40	30	2
S/SX 1250/1850	B_k + 20	B_k + 60	50	3
S/SX 2500/3200	B_k + 25	B_k + 75	80	3
S/SX 5000/6000/7000	B_k + 25	B_k + 75	80	3
CF 055/CF 060	70	85	20	1.5
CF 085	100	115	20	1.5
CF 115	130	155	30	2.0
CF 120	135	160	30	2.0
CF 175	200	225	30	2.0
MF 030.	40	55	20	1.5
MF 050.	70	85	20	1.5
MF 080.	100	115	20	1.5
MF 110.	135	160	30	2.0
MF 170.	200	225	30	2.0

Example for ordering:
Support tray for cable carrier Type S 0950 – B_k 250 mm
Length L_A 3200 mm, Material: zinc-plated steel sheet

Standard support rollers

for types LS/LSX 1050, S/SX 0650, 0950, 1250 and 1800.

- economically priced standard support rollers in light-weight design
- long service life due to ball-bearing rollers
- optimized installation width
- only for use with two-band chains

Design of cable carrier systems with support rollers – see page 33.

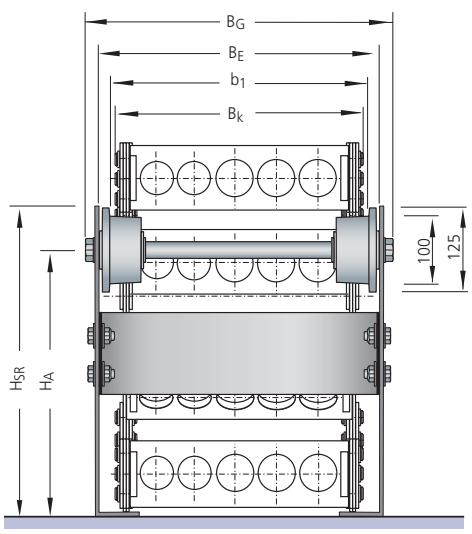

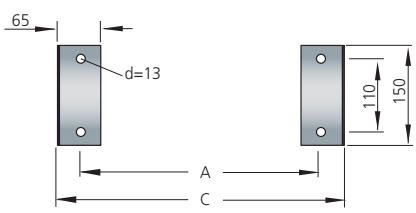

Abbreviations:

B_k = Chain width
b_1 = Clearance width of roller
B_G = Total width of support
B_E = Contact width of roller
H_A = Axle height of support roller
H_{SR} = Height of the support roller
d = Diameter of fixing holes

Standard support rollers dimensions table

Dimensions in mm

B_E	B_G	b_1	H_{SR}	H_A	A	C
B_k + 52	B_k + 90	B_k + 20	2 KR + 15	2 KR – 50	B_k – 10	B_k + 60

Support rollers with reinforced design

for types LS/LSX 1050, S/SX 0650, 0950, 1250 and 1800.

- solid design for extreme loads
- long service life due to ball-bearing roller
- also suitable for multi-band chains
- with hard manganese wear protection for type S/SX and applications with high loads
- also available in stainless steel version

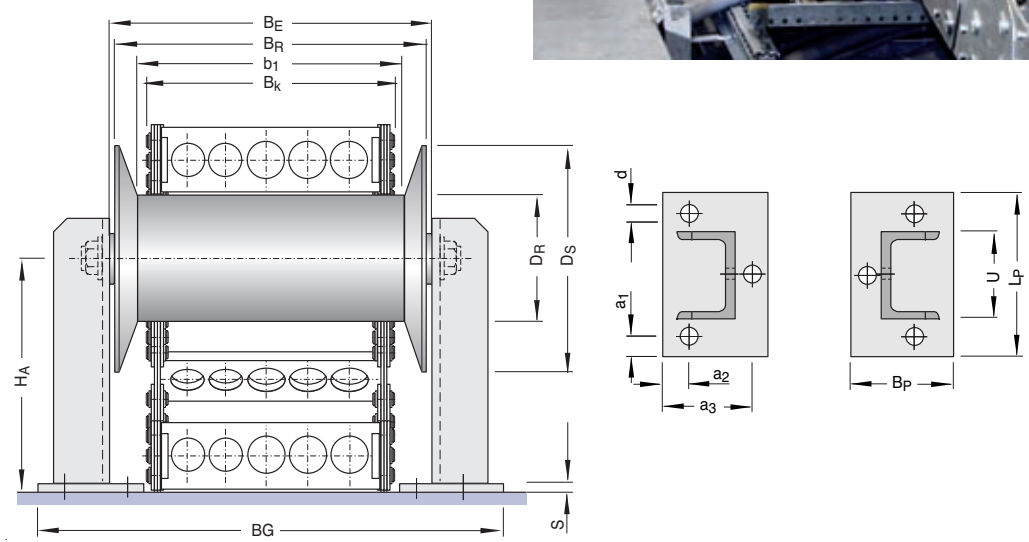

Abbreviations:

D_R	=	Diameter of support roller
D_S	=	Diameter of wheel flange
B_k	=	Chain width
b_1	=	Clearance width of roller
B_G	=	Total width of support
B_R	=	Width of roller
B_E	=	Contact width of roller
B_P	=	Width of base plate
H_A	=	Axle height of support roller
H_{SR}	=	Height of the support roller
L_P	=	Length of base plate
U	=	Width of U profile
a_1	=	Hole distance to side edge of base plate
a_2	=	Hole distance to outer edge of base plate
a_3	=	Hole distance to outer edge of base plate
d	=	Diameter of fixing holes
s	=	Thickness of base plate

Reinforced support rollers dimensions table

Dimensions in mm

Type	D_R	b_1	B_R	B_E	B_G	D_S
LS/LSX 1050	120	B_k + 20	B_k + 50	B_k + 64	B_k + 174	Ø 200
S/SX 0650	90	B_k + 15	B_k + 45	B_k + 59	B_k + 169	Ø 170
S/SX 0950 **S/SX 1250** **S/SX 1800**	120	B_k + 20	B_k + 50	B_k + 64	B_k + 174	Ø 200
S/SX 2500	220	B_k + 30	B_k + 60	B_k + 74	B_k + 184	Ø 300

Support blocks dimensions table

Dimensions in mm

Type	H_A	B_P	L_P	U	a_1	a_2	a_3	d	s
S/SX 1050	2 KR – 60	100	180	80	20	20	80	Ø 18	8
S/SX 0650	2 KR – 45	80	180	80	20	40	---	Ø 14	8
S/SX 0950 **S/SX 1250** **S/SX 1800**	2 KR – 60	100	180	80	20	20	80	Ø 18	8
S/SX 2500	2 KR – 110	100	180	80	20	20	80	Ø 18	8

Support rollers for other types on request.

Steel strip covers.

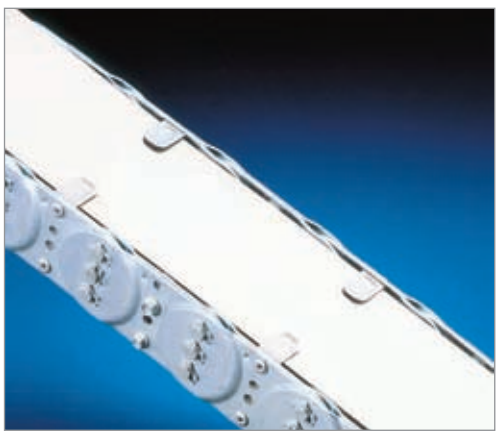

Cable carriers made of rust and acid resistant spring steel strip can be supplied for protection of the cables against flying sparks, radiant heat and small chips.

- **economically priced** cover variant **for half-stay version**
- made of rust and acid resistant spring steel strip
- maximum steel band width: 1000 mm

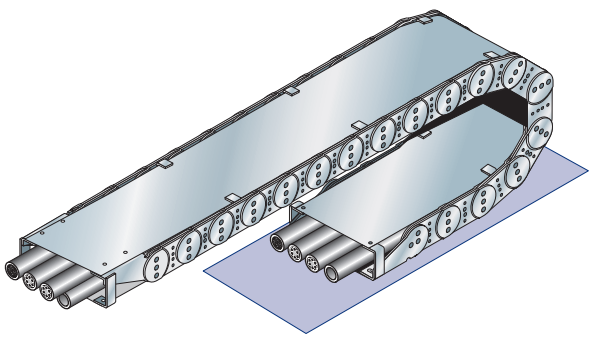

Dimensions Table

Dimensions in mm

Type	Length of steel strip cover		Width of steel strip cover
	Outer cover	Inner cover	
S/SX 0650	L_k + 280	L_k + 130	B_k – 22
S/SX 0950	L_k + 360	L_k + 150	B_k – 27
S/SX 1250	L_k + 470	L_k + 170	B_k – 34
S/SX 1800	L_k + 640	L_k + 200	B_k – 40
S/SX 2500	L_k + 945	L_k + 255	B_k – 48

Steel band covers for the other types are available on request.

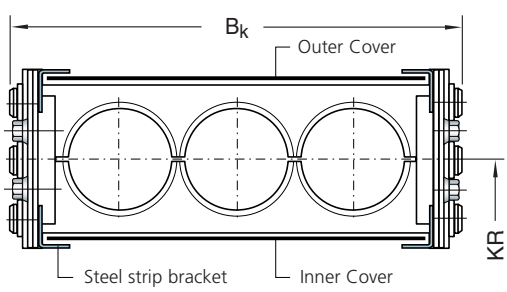

Fixing of steel strip cover

- Steel band holder on the sidebands.

- Fastening to the chain connection with special end connector.

Strain relief components.

Strain relief for cables is dependant upon the cable type, total carrier length and installation situation. See "Strain relief of cables and hoses" on page 48.

In the case of cable carriers with upper and lower trough sliding on each other (installation variant EBV 05), the installation height of the strain relief must not be higher than the chain link height.

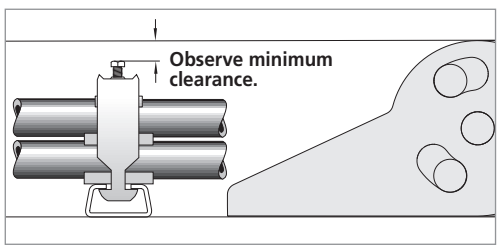

Overview of strain relief elements

SZL strain relief devices

- economically priced solution
- easy installation without tools

See page 169.

Saddle-type clamps

- small installation width
- for one cable and two or three cables on top of each other

See page 170.

Block clamps

- for the strain relief of hoses

See page 172.

Positioning of strain relief components

LS/LSX Series

- The C-Rail is fixed in the end connector and must not be bolted separately.
- Length of the C-Rail L_P
  driver: $L_P = B_i + 4$ mm
  fixed point: $L_P = B_i$

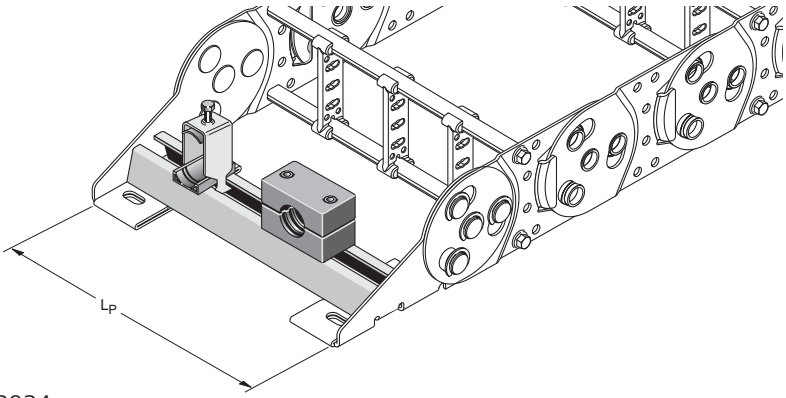

Type S/SX 1050

C-Profile suitable for brackets with small base (slot width 11 – 12 mm).
C-Profile dimensions, see page 173, order no. 3934.

■ Inserting the C-Rail in the end connector

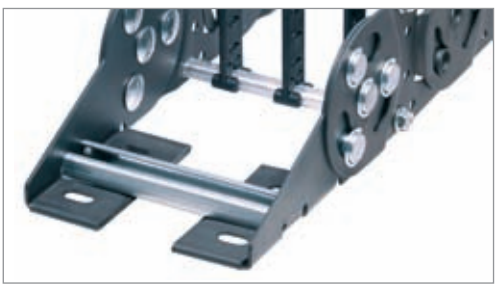

■ C-Rail fixed in the end connector

S/SX Series

- C-Profile and C-Rail are mounted behind the end connectors.
- Strain relief at the fixed point connection and at the driver connection are identical.
- Profile length L_P ≙ chain width B_k

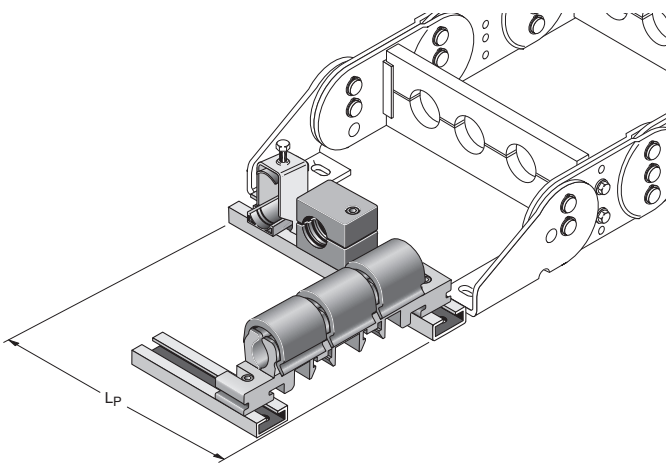

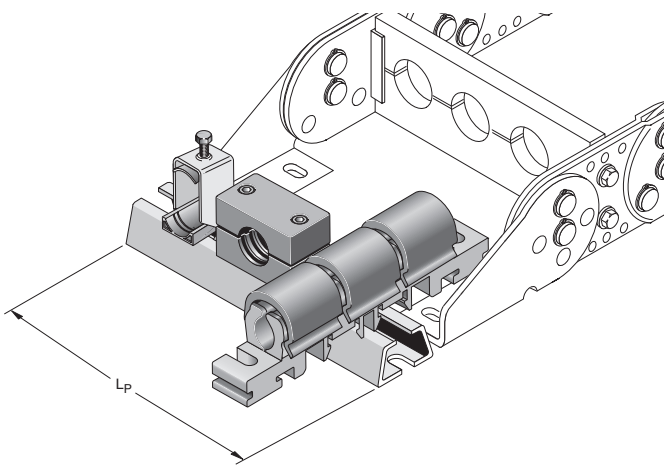

Types S/SX 0650, 0950

C-Profile suitable for brackets with small base (slot width 11 – 12 mm).
C-Profile dimensions, see page 173, order no. 3931.

Fasten profile with cylindrical screws M6 – DIN 6912.

Types S/SX 1250, 1800

C-Profile suitable for brackets with large base (slot width 16 – 17 mm).
C-Profile dimensions, see page 173, order no. 3926/3932.

Fasten profile with cylindrical screws M10 – DIN 6912.

Strain relief equipment for all other series is available on request!

SZL strain relief devices

- economically priced
- installation – easy, fast and without tools
- gentle on cables due to large surface area contact with the cables
- small installation height
- without screws and cable binders
- defined contact pressure exerted by spring clamps
- suitable for common commercially available support rails
- immune to vibration
- long service life for dynamic applications
- can also be used as strain relief in switch cabinets.

Available sizes

Dimensions in mm

Type	Ident-No.	For Diameter Ø	Width B for Ø min	Width B for Ø max	Height H
SZL 8	24989	> 5.0 - 8.0 mm	16	16	28
SZL 10	24990	> 8.0 - 10.5 mm	20	20	30
SZL 14	24991	>10.5 - 14.5 mm	23	26	35
SZL 18	24992	>14.5 - 18.0 mm	25	32	40
SZL 22	24993	>18.0 - 22.0 mm	30	36	44
SZL 27	24994	>22.0 - 27.0 mm	34	39	50
SZL 32	24995	>27.0 - 32.0 mm	39	44	56

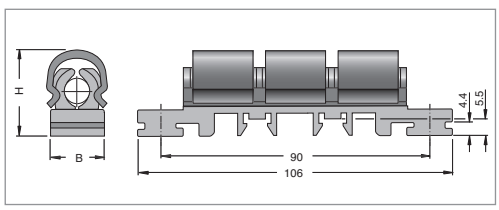

Fixing options

1. By clipping into C-Profiles.

2. Byclipping onto cap bar.

3. By pushing into two C-profile bars.

4. By directly screwing

Solutions 3 and 4 make the transmission of large tensile forces possible and are therefore recommended as standard solutions.

Installation of the SZL strain relief device

Saddle-type clamps

- small installation width
- for one cable and two or three cables on top of each other

Strain relief elements for types 1050, 0650 and 0950

Saddle-type clamps with a small base

Dimensions in mm

Type	For cable Ø	Height H_{Sch}	Widths B_{Sch}	Item-No.
Single clamps – for one cable				
BA 12	6 - 12 mm	33 - 49	16	**16891**
BA 14	10 - 14 mm	34 - 50	18	**16892**
BA 16	12 - 16 mm	36 - 52	20	**16893**
BA 18	14 - 18 mm	40 - 56	22	**16894**
BA 22	18 - 22 mm	44 - 60	26	**16895**
BA 26	22 - 26 mm	49 - 65	30	**16896**
BA 30	26 - 30 mm	53 - 69	34	**16897**
BA 34	30 - 34 mm	60 - 76	38	**16898**
BA 38	34 - 38 mm	72 - 88	42.5	**16899**
BA 42	38 - 42 mm	85 - 101	46.5	**16900**
Double clamps – for two cables on one top of the other				
BA 12/2	6 - 12 mm	43.5 - 59.5	16	**16901**
BA 14/2	10 - 14 mm	46.5 - 62.5	18	**16902**
BA 16/2	12 - 16 mm	52.5 - 68.5	20	**16903**
BA 18/2	14 - 18 mm	55.5 - 71.5	22	**16904**
BA 22/2	18 - 22 mm	64 - 80	26	**16905**
Triple clamps – for three cables stacked on top of each other				
BA 12/3	6 - 12 mm	59.5 - 75.5	16	**16906**
BA 14/3	10 - 14 mm	78 - 98	18	**16907**

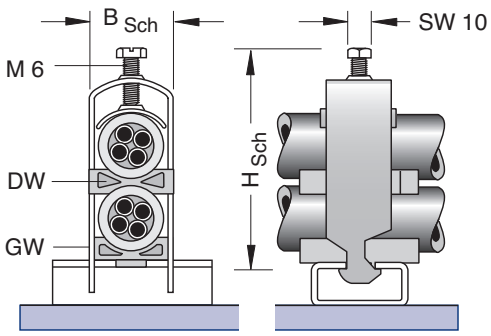

Assembly profile bars

suitable for all common commercially available saddle-type clamps with **small** base (slot width 11 – 12 mm)

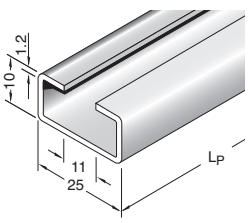

Material: Steel
Item-No.: 3931

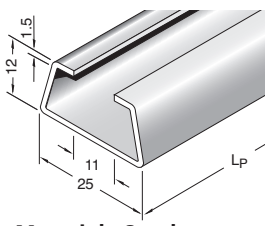

Material: Steel
Item-No.: 3934

Opposite sleeves

Opposite sleeves – for uniform distribution of tensile forces

Type	For cable Ø	b	h	h_1	R	L	Item-No.
GW 12	6 - 12 mm	12	4	1.0	6	40	**16908**
GW 14	10 - 14 mm	14	4.5	1.0	7	40	**16909**
GW 16	12 - 16 mm	16	4.5	1.0	8	40	**16910**
GW 18	14 - 18 mm	18	4.5	1.0	9	40	**16911**
GW 22	18 - 22 mm	20	5.5	1.5	11	40	**16912**
GW 26	22 - 26 mm	24	6.5	1.5	13	40	**16913**
GW 30	26 - 30 mm	28	7	1.5	15	40	**16914**
GW 34	30 - 34 mm	32	8	2.0	18	40	**16915**
GW 38	34 - 38 mm	38	9	2.0	19.5	40	**16916**
GW 42	38 - 42 mm	42	10	2.0	21.5	40	**16917**

Opposite sleeve
GW

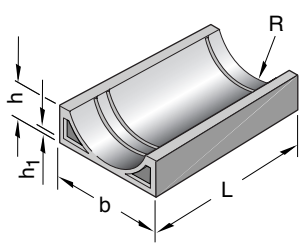

Double sleeve – for distribution of tensile forces on both sides

Type	For cable Ø	b	h	h_1	R	L	Item-No.
DW 12	6 - 12 mm	12	7	1.0	6	40	**16862**
DW 14	10 - 14 mm	14	8	1.0	7	40	**16863**
DW 16	12 - 16 mm	16	9	1.0	8	40	**16864**
DW 18	14 - 18 mm	18	9	1.0	10	40	**16865**
DW 22	18 - 22 mm	22	10	1.5	12	40	**16875**

Other sizes and designs available on request!

Double sleeve
DW

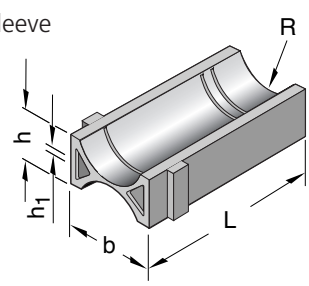

Subject to change.

Strain relief elements for series 1250 and 1800

Saddle-type clamps with a large base

Dimensions in mm

Type	For cable Ø	Height H_{Sch}	Widths B_{Sch}	M	SW	Item-No.
Single clamps – for one cable						
B 12	6 - 12 mm	31.5 - 47.5	16	6	10	**16840**
B 14	10 - 14 mm	33.5 - 49.5	18	6	10	**16841**
B 16	12 - 16 mm	34.5 - 50.5	20	6	10	**16842**
B 18	14 - 18 mm	37.5 - 53.5	22	6	10	**16843**
B 22	18 - 22 mm	41.5 - 57.5	26	6	10	**16844**
B 26	22 - 26 mm	47.5 - 63.5	30	6	10	**16845**
B 30	26 - 30 mm	52.5 - 68.5	34	6	10	**16846**
B 34	30 - 34 mm	64.5 - 80.5	38	6	10	**16847**
B 38	34 - 38 mm	70.5 - 86.5	42.5	6	10	**16848**
B 42	38 - 42 mm	73.5 - 89.5	46.5	6	10	**16866**
B 46	42 - 46 mm	80.5 - 96.5	50.5	8	13	**16867**
B 50	46 - 50 mm	83.5 - 99.5	54.5	8	13	**16868**
Double clamps – for two cables on one top of the other						
B 12/2	6 - 12 mm	43.5 - 59.5	16	6	10	**16849**
B 14/2	10 - 14 mm	49.5 - 65.5	18	6	10	**16850**
B 16/2	12 - 16 mm	55.5 - 71.5	20	6	10	**16851**
B 18/2	14 - 18 mm	60.5 - 76.5	22	6	10	**16852**
B 22/2	18 - 22 mm	75.5 - 91.5	26	6	10	**16872**
B 26/2	24 - 26 mm	83.5 - 99.5	30	6	10	**16873**
B 30/2	28 - 30 mm	91.5 - 107.5	34	6	10	**16933**
B 34/2	32 - 34 mm	99.5 - 115.5	38	6	10	**16934**
B 38/2	36 - 38 mm	107.5 - 123.5	42.5	6	10	**16935**
B 42/2	40 - 42 mm	115.5 - 131.5	46.5	6	10	**16936**
Triple clamps – for three cables stacked on top of each other						
B 12/3	12 mm	54.5 - 70.5	16	6	10	**16876**
B 14/3	14 mm	66.5 - 82.5	18	6	10	**16877**
B 16/3	16 mm	71.5 - 87.5	20	6	10	**16878**
B 18/3	18 mm	77.5 - 93.5	22	6	10	**16937**
B 22/3	22 mm	89.5 - 105.5	26	6	10	**16938**
B 26/3	26 mm	101.5 - 117.5	30	6	10	**16939**
B 30/3	30 mm	113.5 - 129.5	34	6	10	**16940**

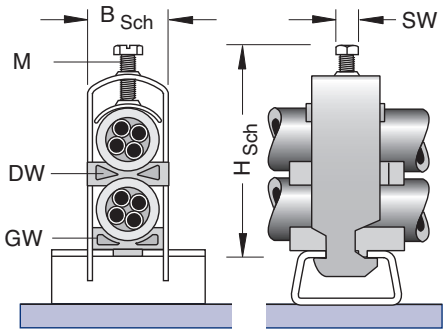

Assembly profile bars

suitable for all common commercially available saddle-type clamps with **large** base (slot width 16 – 17 mm).

Material:	**Aluminium**	**Steel**
Item-No.:	3926	3932

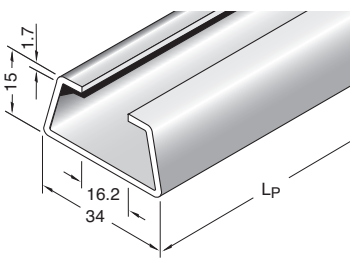

Opposite sleeves

Opposite sleeves – for uniform distribution of tensile forces

Type	For cable Ø	b	h	h_1	R	L	Item-No.
GW 12	6 - 12 mm	12	4	1.0	6	40	**16853**
GW 14	10 - 14 mm	14	4.5	1.0	7	40	**16854**
GW 16	12 - 16 mm	16	4.5	1.0	8	40	**16855**
GW 18	14 - 18 mm	18	4.5	1.0	9	40	**16856**
GW 22	18 - 22 mm	20	5.5	1.5	11	40	**16857**
GW 26	22 - 26 mm	24	6.5	1.5	13	40	**16858**
GW 30	26 - 30 mm	28	7	1.5	15	40	**16859**
GW 34	30 - 34 mm	32	8	2.0	18	40	**16860**
GW 38	34 - 38 mm	38	9	2.0	19.5	40	**16861**
GW 42	38 - 42 mm	42	10	2.0	21.5	40	**16869**
GW 46	42 - 46 mm	46	11	2.0	23.5	40	**16870**
GW 50	46 - 50 mm	50	12	2.0	25.5	40	**16871**

Opposite sleeve
GW

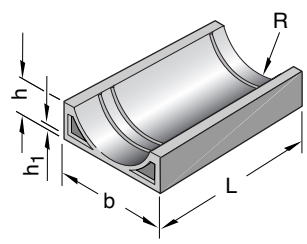

Double sleeve – for distribution of tensile forces on both sides

Type	For cable Ø	b	h	h_1	R	L	Item-No.
DW 12	6 - 12 mm	12	7	1.0	6	40	**16862**
DW 14	10 - 14 mm	14	8	1.0	7	40	**16863**
DW 16	12 - 16 mm	16	9	1.0	8	40	**16864**
DW 18	14 - 18 mm	18	9	1.0	10	40	**16865**
DW 22	18 - 22 mm	22	10	1.5	12	40	**16875**
DW 26	24 - 26 mm	26	12	1.5	14	40	**16942**
DW 30	28 - 30 mm	30	15	2.0	16	40	**16944**
DW 34	30 - 34 mm	34	15	2.0	18	40	**16945**
DW 38	34 - 38 mm	38	15	2.0	20	40	**16946**
DW 42	38 - 42 mm	42	20	4.0	21.5	40	**16947**

Double sleeve
DW

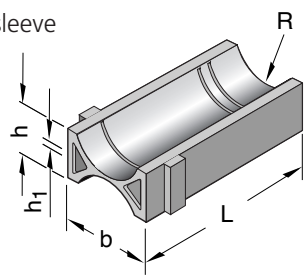

Other sizes and designs available on request!

Block clamps for series 1050, 0650 to 1800

- for strain relief of hoses
- with clamping bolt(s) and mounting rail nut(s)

Single clamps – one cable

Type BS 0

Dimensions in mm

Type	For cable Ø	Height H_{Sch}	Width B_{Sch}	Bolts M6 – DIN 6912 Number	Bolts M6 – DIN 6912 Length	Item-No.
BS 0.06	6 - 7 mm	26	28	1	35	**16701**
BS 0.07	7 - 8 mm	26	28	1	35	**16702**
BS 0.08	8 - 9 mm	26	28	1	35	**16703**
BS 0.09	9 - 10 mm	26	28	1	35	**16704**
BS 0.10	10 - 12 mm	26	28	1	35	**16705**

Other sizes and designs available on request!

Type **BS 0.__**

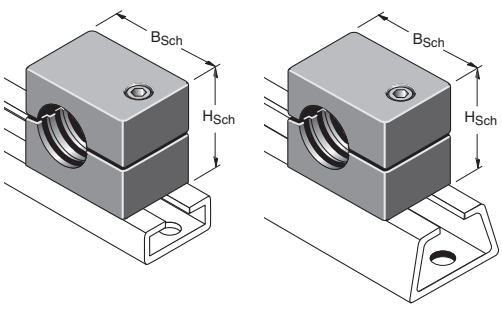

Assembly profile bars:

Material: Steel
Item-No.: 3931

Material: Steel
Item-No.: 3934

Type BS 1 – BS 5

Dimensions in mm

Type	For cable Ø	Height H_{Sch}	Width B_{Sch}	Bolts M6 – DIN 6912 Number	Bolts M6 – DIN 6912 Length	Item-No.
BS 1.06	6 - 7 mm	26	34	2	35	**16706**
BS 1.07	7 - 8 mm	26	34	2	35	**16707**
BS 1.08	8 - 9 mm	26	34	2	35	**16708**
BS 1.09	9 - 10 mm	26	34	2	35	**16709**
BS 1.10	10 - 11 mm	26	34	2	35	**16710**
BS 1.12	12 - 14 mm	26	34	2	35	**16711**
BS 2.14	14 - 16 mm	32	40	2	40	**16712**
BS 2.16	16 - 18 mm	32	40	2	40	**16713**
BS 2.18	18 - 20 mm	32	40	2	40	**16714**
BS 3.20	20 - 22 mm	36	48	2	45	**16715**
BS 3.22	22 - 23 mm	36	48	2	45	**16716**
BS 3.23	23 - 25 mm	36	48	2	45	**16717**
BS 3.25	25 - 27 mm	36	48	2	45	**16718**
BS 3.27	27 - 30 mm	36	48	2	45	**16719**
BS 3.30	30 - 34 mm	36	48	2	45	**16721**
BS 4.32	32 - 34 mm	56	69	2	65	**16722**
BS 4.34	34 - 36 mm	56	69	2	65	**16723**
BS 4.35	35 - 37 mm	56	69	2	65	**16724**
BS 4.38	38 - 40 mm	56	69	2	65	**16725**
BS 4.40	40 - 42 mm	56	69	2	65	**16726**
BS 4.42	42 - 44 mm	56	69	2	65	**16727**
BS 5.45	45 - 48 mm	65	85	2	75	**16728**
BS 5.48	48 - 51 mm	65	85	2	75	**16729**
BS 5.51	51 - 54 mm	65	85	2	75	**16731**

Other sizes and designs available on request!

Type **BS 1.__ - BS 5.__**

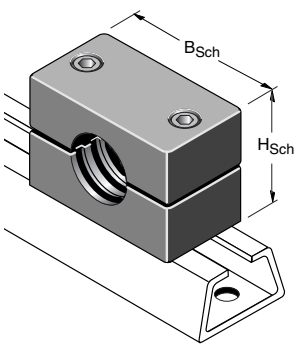

Assembly profile bars:

Material: Aluminium
Item-No.: 3926

Material: Steel
Item-No.: 3932

Material of the clamping jaws: PP

Assembly profile bars for strain relief elements

C-Profile 25 x 10 mm for S/SX 0650/0950

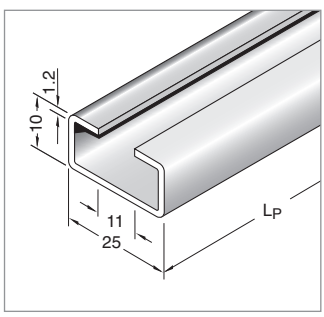

fits all commercial clamps, **(slit width 11 – 12 mm),**
Types BA see page 170.

Material	**Item-No.**
Steel	3931

Attach profile with M6 – DIN 6912 sockethead cap screws.

C-Rail 25 x 12 mm for LS/LSX 1050, S/SX 0650/0950

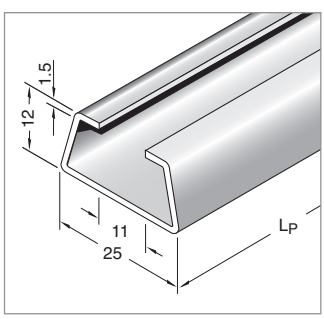

fits all commercial clamps **(slit width 11 – 12 mm)**,
Types BA see page 170.

Material	**Item-No.**
Steel	3934

LS/LSX 1050: is fixed in the end connector; must not be bolted separately.
S/SX 0650/0950: Attach profile with M6 – DIN 6912 sockethead cap screws.

C-Rail 34 x 15 mm for S/SX 1250/1800

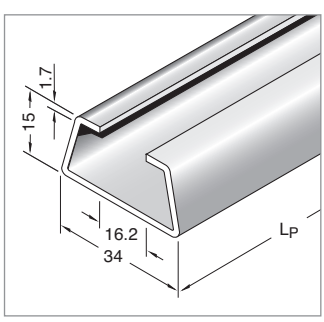

fits all commercial clamps **(slit width 16 – 17 mm)**,
Types B see page 171.

Material	**Item-No.**
Aluminium	3926
Steel	3932

Attach profile with M 10 – DIN 6912 sockethead cap screws.

Fax Enquiry Form

Telefax: +49 271 5801-220

From:

Company: _____

Contact: _____ Department: _____

Phone: _____ Telefax: _____ Email: _____

Please submit exact specifications in order for us to plan a solution for your application.
We would be pleased to submit a comprehensive proposal based on your enquiry!

☐ Please have an applications engineer call for an appointment!

☐ Proposal for: **Enquiry number:** _____

☐ **Cable carriers including enclosed designs**

☐ Zinc-plated steel ☐ Rust acid resistant stainless steel

☐ Steel – specially coated

☐ CONDUFLEX ☐ MOBIFLEX

☐ **Accessories** ☐ Support trays ☐ Guide channels ☐ Electric cables ☐ Strain relief devices

We require the following information to prepare a proposal:

1.00 Machinery data

.10 Application _____

_____

.20 Environmental conditions _____

.21 Ambient operating temperature _____ °C

.30 Maximum machine travel length Ls _____ mm

.40 Max. acceleration/deceleration _____ m/s²

.50 Travel speed _____ m/s

.60 Travel frequency _____ times/h

.70 Installation situation (drawing/outline) _____

.71 Max. installation height H _____ mm

.72 Max. installation width B _____ mm

.73 Installation variant EBV _____

Terms:

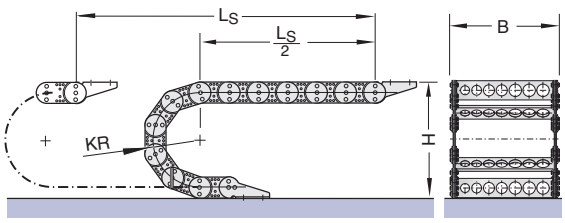

2.00 Supply cables/hoses

Cable type											
electr.	pneum.	hydr.	Fibre-optic cables	Number of cables	Cable cross section (e.g. 4x6 mm²)	Ø in mm	Hose diameter at operating pressure in mm	Number of pressure oscillations per hour	Weight in kg/m	Minimum-bend radius in mm	Cables with fixed plugs or terminal fittings

3.00 Supplementary information:

_____

_____

_____

Subject to change.

Information request

Telefax: +49 271 5801-220

Please send me the following catalogue / information material:

- ❑ **Innovations brochure**
- ❑ **Design manual** – plastic cable carriers catalogue
- ❑ **LIFE-LINE Safety Cables catalogue** – electrical cables for cable carriers
- ❑ **Energy in motion** – steel and plastic cable carriers
- ❑ **Guideway protection and conveyor systems catalogue**
- ❑ **Range of services brochure** – the KABELSCHLEPP product range
- ❑ **CD-ROM** – spare parts lists and brochure material in PDF format
- ❑ **CD-ROM** – 2D/3D data of cable carrier systems

From:

Company: _____

Name: _____

Position: _____

Address: _____

ZIP code: _____ Town: _____

Phone: _____

Telefax: _____

Email: _____

Steel Cable Carriers

Application Examples

Application examples.

Steel Cable Carriers.

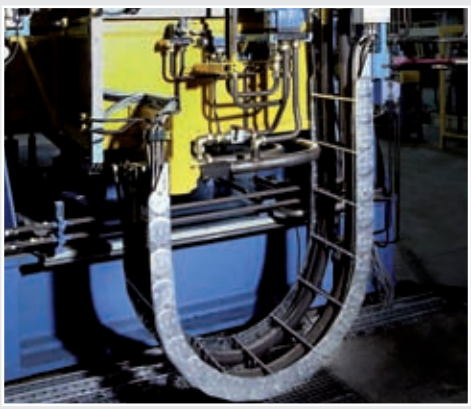

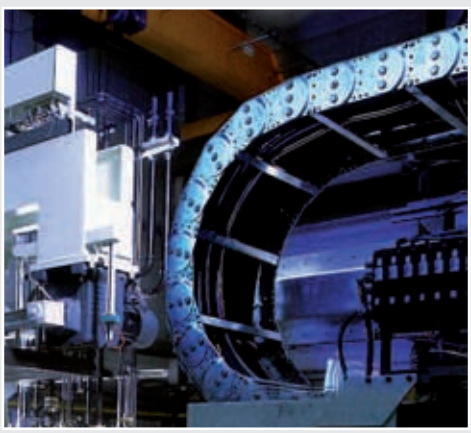

Steel cable carriers on a manipulator for handling crankcase core stackings.
Photographs: Hottinger Maschinenbau GmbH

Steel cable carrier on a scissored coil lift. Photographs: SÜDO GmbH

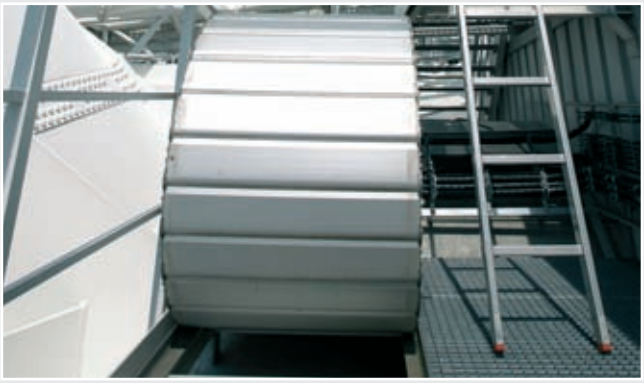

Steel cable carriers with aluminium cover system on a radio telescope.
Photographs: Max-Planck-Institut für Radioastronomie

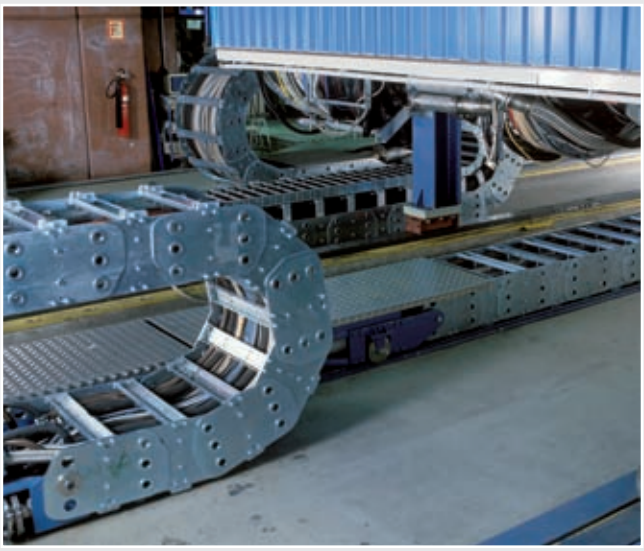

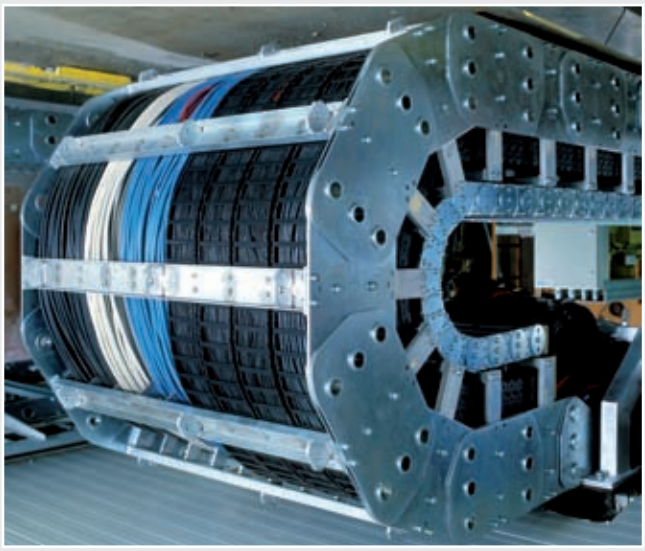

Steel cable carriers with plastic cable carriers for separating the cables on a ZEUS detector.
Photograph: Deutsches Elektronen-Synchrotron, Hamburg

Steel Cable Carriers.

Steel cable carriers on a movable roof construction.
Photographs: Lindenschmidt KG

Steel cable carriers with steel band cover on a shredding system. Photographs: Lindenschmidt KG

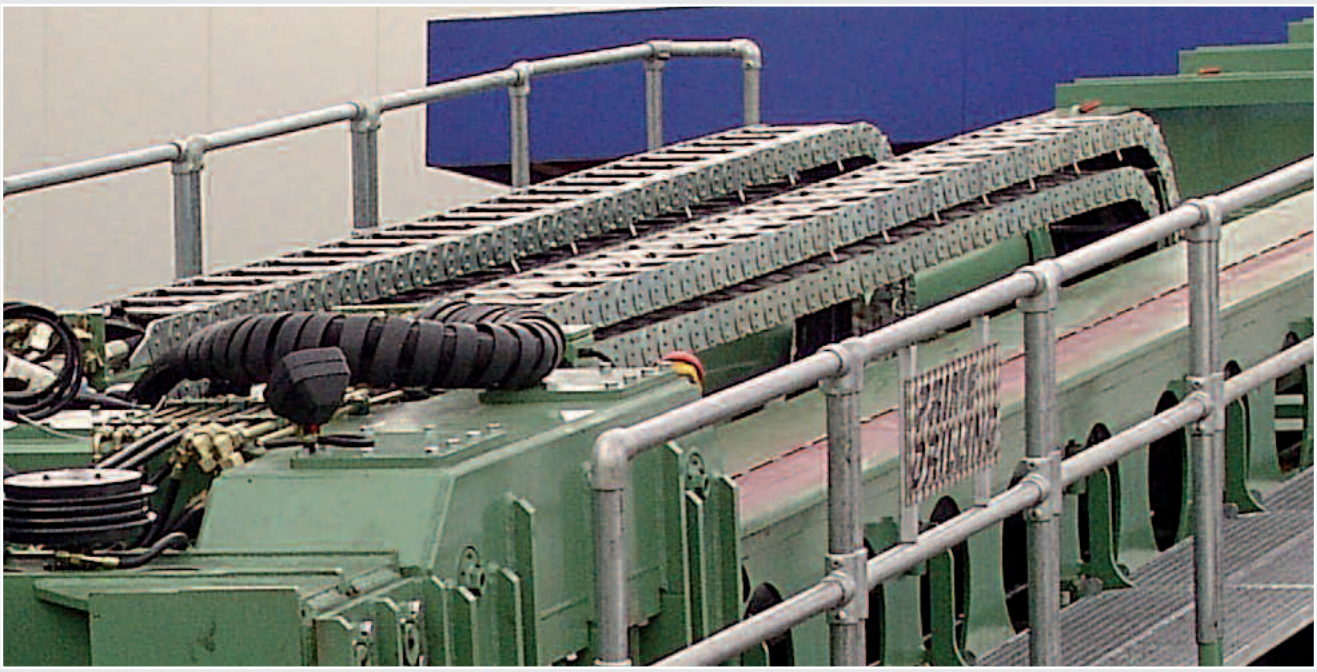

Steel cable carriers on a drilling system. Photograph: Prime Drilling GmbH

Steel cable carriers on telescopic lifts.

Steel Cable Carriers.

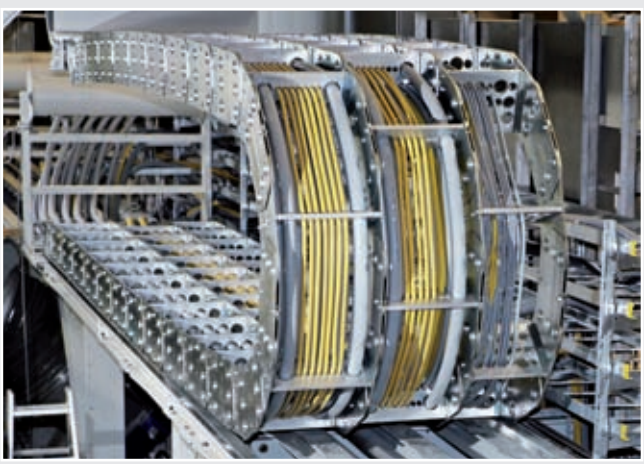

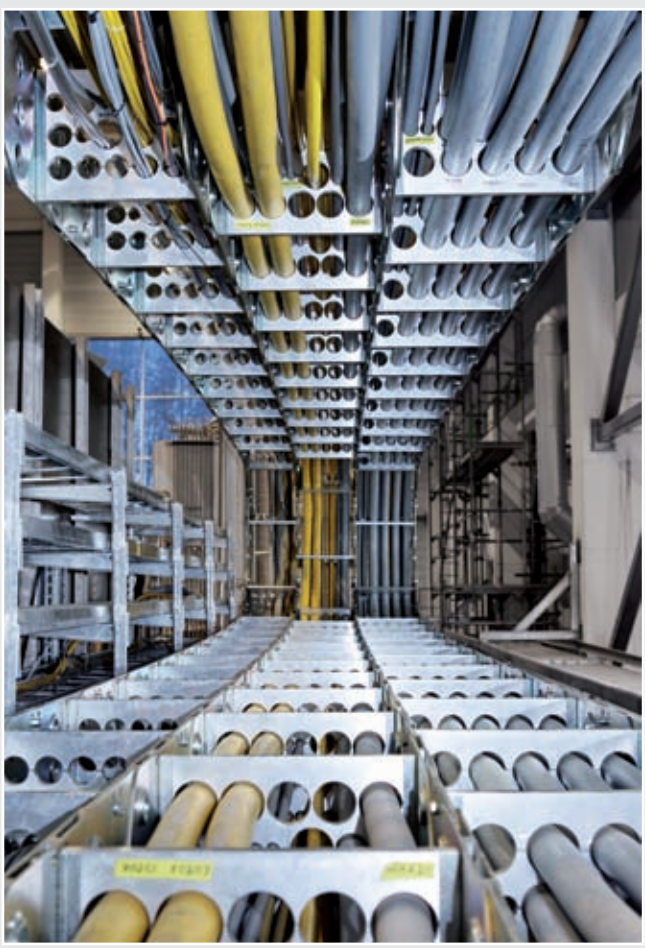

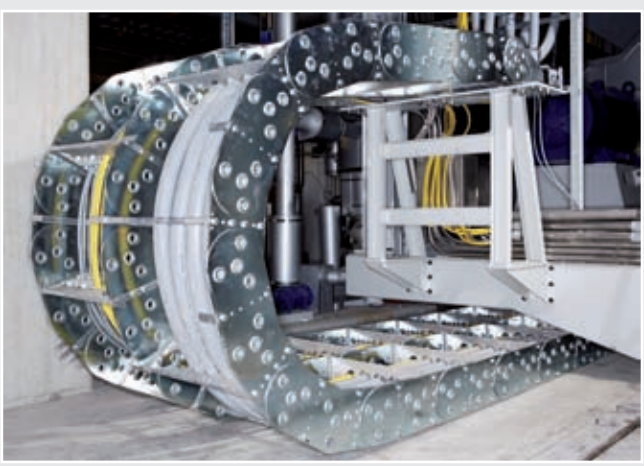

Steel cable carriers on a paper machine. Photographs: Voith Paper Technology Center GmbH

More information: **www.kabelschlepp.de**

Subject to change.

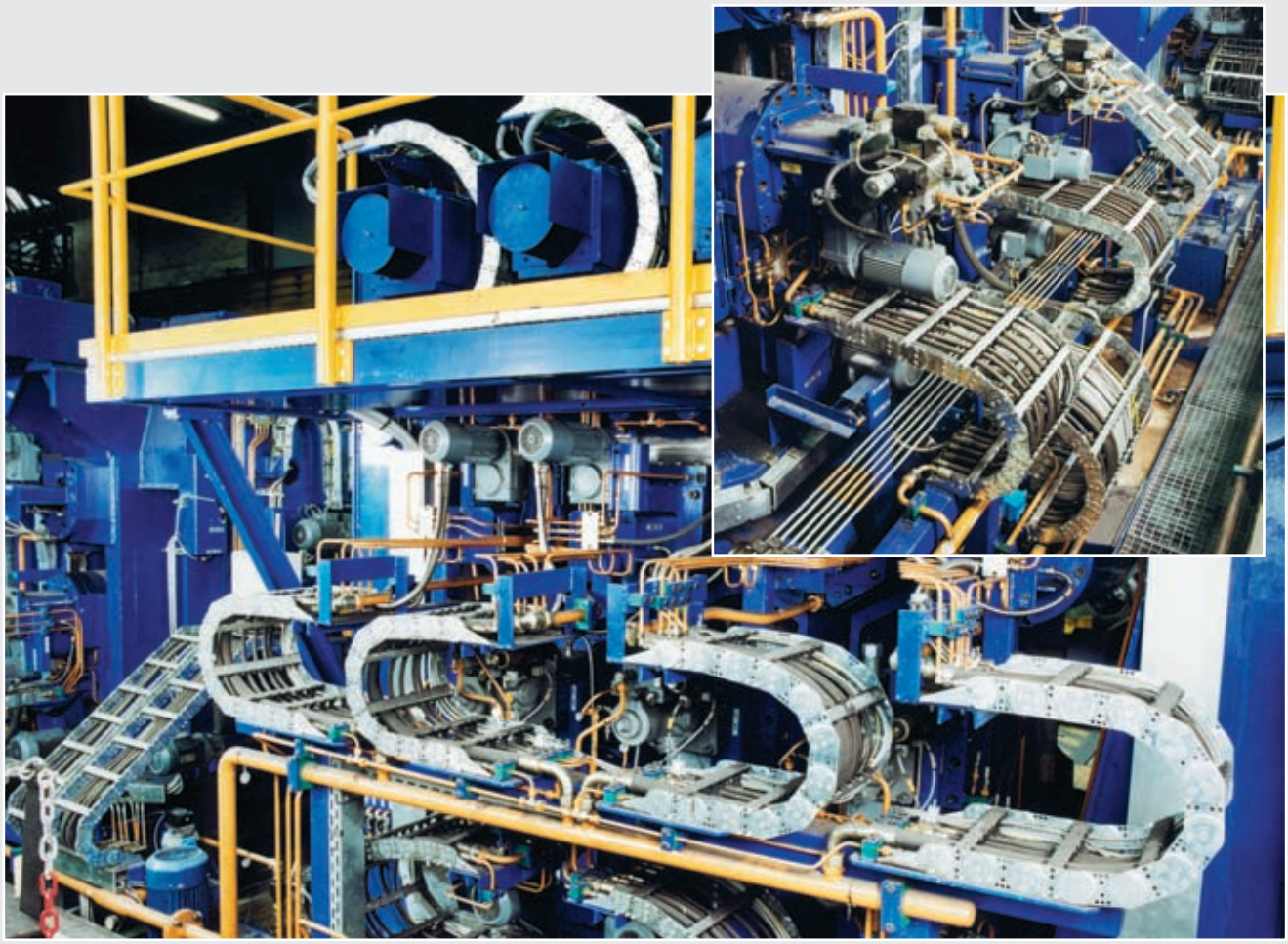

Steel cable carriers on a profile straightening machine. Photographs: Sondermaschinenbau Wildau GmbH & Co. KG

Steel cable carriers with load-bearing bolts. Photograph: Rottler GmbH

Steel cable carriers on a laser cutting machine. Photographs: Meyer Werft GmbH

Steel Cable Carriers.

Steel cable carriers with hole stays.

CONDUFLEX cable carrier tubes on a roll grinding machine.
Photograph: Waldrich Siegen Werkzeugmaschinen GmbH

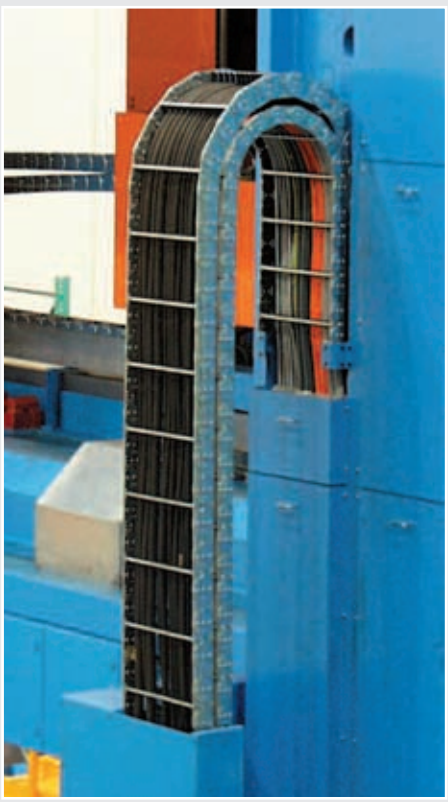

Steel cable carriers on a gantry milling machine. Photograph: Waldrich Siegen Werkzeugmaschinen GmbH

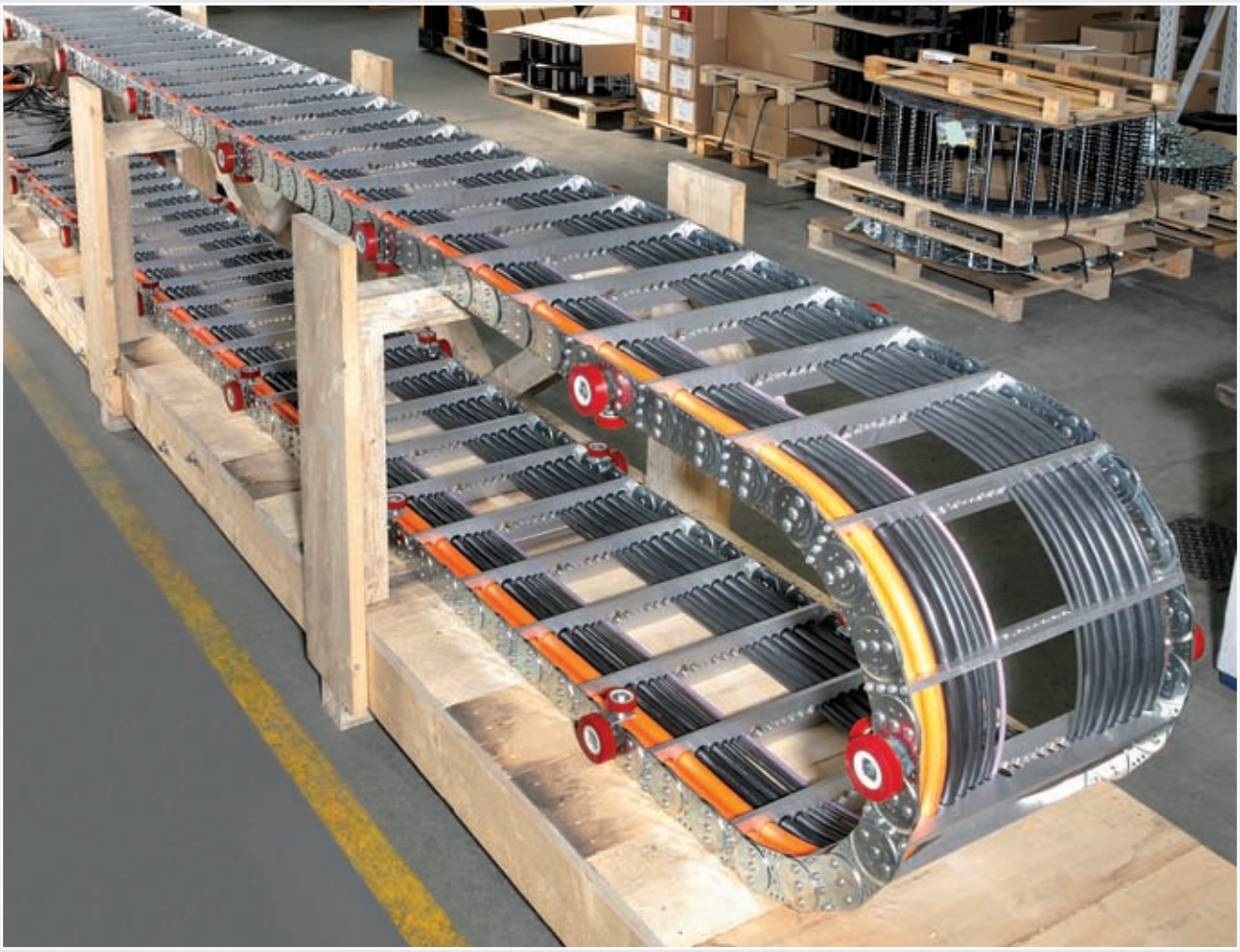

Steel cable carriers with LIFE-LINE Safety Cables on transport frame.

Steel cable carriers with hydraulic hoses.

Steel cable carriers with hole stays.

Steel Cable Carriers.

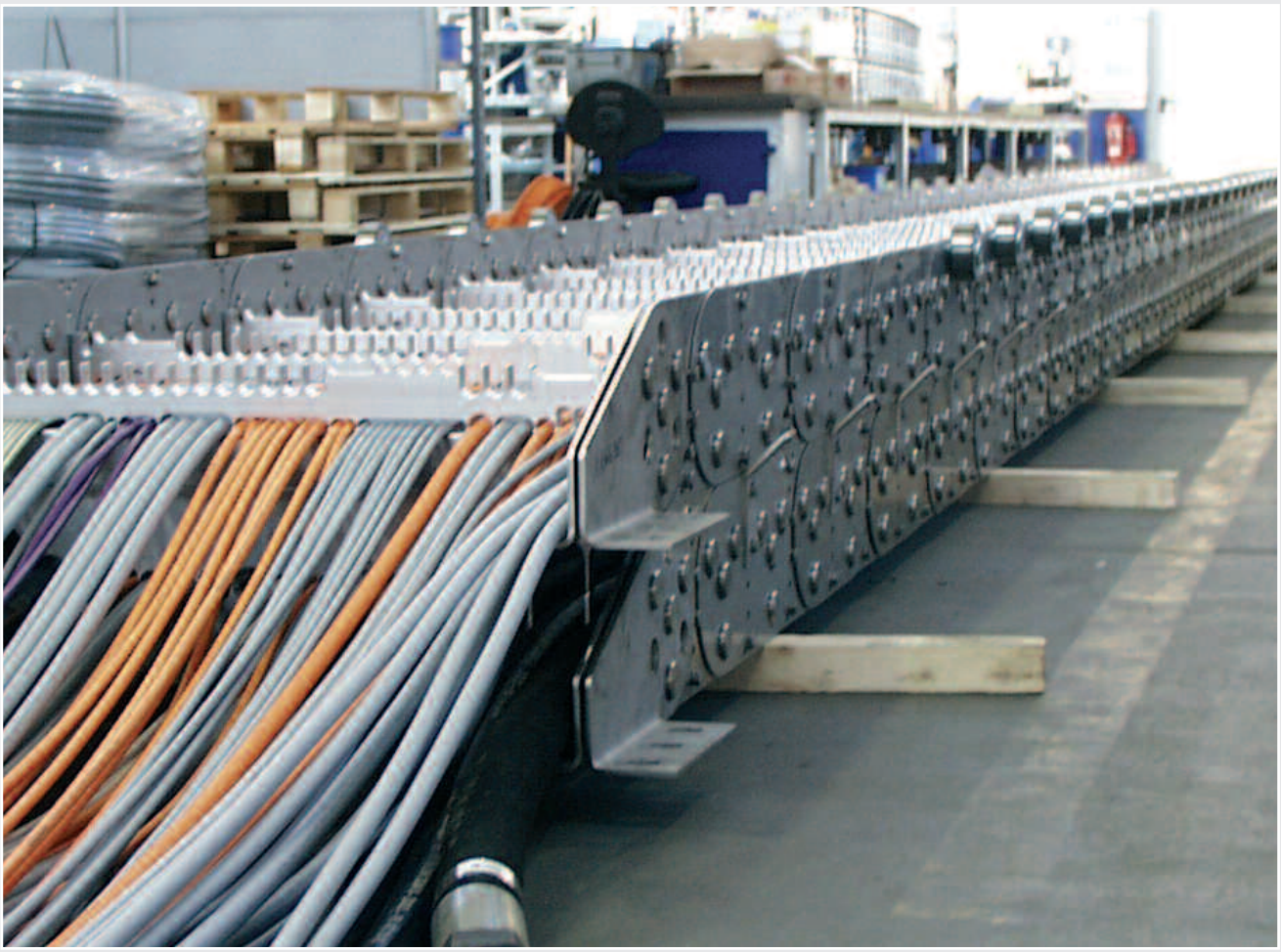

Steel cable carriers with LIFE-LINE Safety Cables.

Steel cable carriers in 4-band version.

Steel cable carriers on transport frame.

Steel cable carriers on transport frame.

Steel cable carrier with load-bearing bolts.

Steel cable carriers in 4-band version.

the power to innovate

Cable and Hose Carrier Systems

- Cable carriers made of Steel and Plastic
- QUANTUM Cable and hose carrier system
- PROTUM Cable and hose carrier system
- PROFILE Cable and hose carrier system
- ROBOTRAX Cable and hose carrier system
- LIFE-LINE Cable systems
- TOTALTRAX Turn-Key Systems

Guideway Protection Systems

- Telescopic covers
- Link apron covers
- Way wipers
- Conical spring covers
- Bellows

Conveyor Systems

- Hinged belt conveyors
- Scraper conveyors
- Belt conveyors

KABELSCHLEPP GmbH
Marienborner Str. 75
D-57074 Siegen
Fon: +49 271 5801-0
Fax: +49 271 5801-220
E-Mail: info@kabelschlepp.de
www.kabelschlepp.de

KABELSCHLEPP worldwide
For contacts, adresses
and much more, visit our
web site at www.kabelschlepp.de

02/2008 GB