The SKINDICHT® MR-M reducers enable the use of cable glands which outer thread is smaller than the already existing thread borings in machines, devices and housings.

Technical features:

Material	Brass / Brass lead free, nickel-plated (external thread M16x1.5 up to M72x2)
	Brass, bright (internal thread M80x2)
O-ring (optional)	NBR
External thread	M16x1.5 up to M80x2 acc. to EN 60423
Internal thread	M12x1.5 up to M75x1,5 acc. to EN 60423
Temperature range	-60°C up to +200°C

Norm CE references:

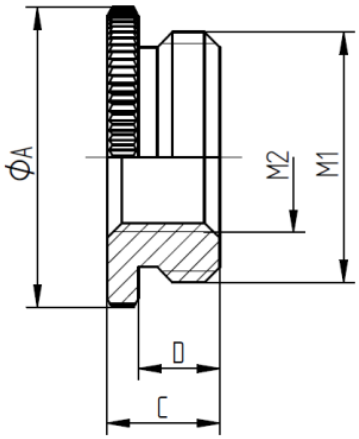

We reserve all rights according to DIN ISO 16016.

SKINDICHT® MR-M

External thread M1	Internal thread M2	Diameter Ø A mm	High C mm	High D mm	Article No.	
					Brass	Brass lead free
M16x1,5	M12x1,5	20	8,5	6	52104310	52104310LF
M20x1,5	M12x1,5	24	9	6,5	52104311	52104311LF
M20x1,5	M16x1,5	24	9	6,5	52104312	52104312LF
M25x1,5	M16x1,5	30	10	7	52104313	52104313LF
M25x1,5	M20x1,5	30	10	7	52104314	52104314LF
M32x1,5	M20x1,5	37	11,5	8	52104315	52104315LF
M32x1,5	M25x1,5	37	11,5	8	52104316	52104316LF
M40x1,5	M25x1,5	46	12,5	9	52104317	52104317LF
M40x1,5	M32x1,5	46	12,5	9	52104318	52104318LF
M50x1,5	M32x1,5	56	14	10	52104319	52104319LF
M50x1,5	M40x1,5	56	14	10	52104320	52104320LF
M63x1,5	M40x1,5	68	14	10	52104321	52104321LF
M63x1,5	M50x1,5	68	14	10	52104322	52104322LF
M72x2	M63x1,5	78	19	12	52006575	52006575LF
M80x2	M75x1,5	86	19	12	52006579	-

SKINDICHT® MR-M with o-ring

External thread M1	Internal thread M2	Diameter Ø A mm	High C mm	High D mm	Article No.	
					Brass	Brass lead free
M16x1,5	M12x1,5	20	8,5	6	52104409	-
M20x1,5	M12x1,5	24	9	6,5	52104411	-
M20x1,5	M16x1,5	24	9	6,5	52104412	-
M25x1,5	M16x1,5	30	10	7	52104413	-
M25x1,5	M20x1,5	30	10	7	52104414	-
M32x1,5	M20x1,5	37	11,5	8	52104419	-
M32x1,5	M25x1,5	37	11,5	8	52104416	-
M40x1,5	M25x1,5	46	12,5	9	52104417	-
M40x1,5	M32x1,5	46	12,5	9	52104418	-
M50x1,5	M32x1,5	56	14	10	52104421	-
M50x1,5	M40x1,5	56	14	10	52104422	-
M63x1,5	M40x1,5	68	14	10	52104423	-
M63x1,5	M50x1,5	68	14	10	52104424	-

For more information please see our current catalogue. Please do not hesitate to contact our laboratory if there are any questions regarding resistance against aggressive agents and special oil.

We reserve all rights according to DIN ISO 16016.